CITY OF NEWTON, MASSACHUSETTS

GENERAL CONSTRUCTION DETAILS

(CONFORMING TO THE CITY OF NEWTON STANDARD SPECIFICATIONS)

REVISED THROUGH MARCH 2003

PREPARED AND ISSUED BY:

NEWTON ENGINEERING DEPARTMENT
1000 COMMONWEALTH AVENUE
NEWTON CENTRE, MA , 02459
617-796-1020

BOUNDS

1 CROSS SECTION OF STREETS
2 SIDEWALK AND CURB SCHEME
8 GRANITE

CASTINGS

31 SINGLE CATCHBASIN GRATE AND FRAME
32 DOUBLE CATCHBASIN GRATE AND FRAMES
33 MANHOLE FRAMES AND COVERS
34 MANDATORY REQUIREMENTS MANHOLE AND CATCHBASIN

CATCHBASINS

39 STANDARD CATCHBASIN (OLD CONSTRUCTION)
40 STANDARD CATCHBASIN (CONCRETE BLOCK / NEW CONSTRUCTION)
41 PRECAST CONCRETE CATCH BASIN (GAS TRAP TYPE SHOWN)
42 SPECIAL CATCHBASIN TO WATERCOURSE (GAS TRAP TYPE SHOWN)
43 DROP INLET (PIPE TO PIPE)
44 DROP INLET (CHUTE AND "D" TYPES)
45 DOUBLE CATCHBASIN (BLOCK)
46 DRYWELL CATCHBASIN (BLOCK TYPE)

CURB

1 CROSS SECTION OF STREETS
1A DRIVEWAYS, CURB AND SIDEWALKS INSTALLATIONS
2 SIDEWALK AND CURB SCHEME
3 CEMENT CONCRETE CURB CUTS WITH LOAM BORDERS (1/3)
4 CEMENT CONCRETE CURB CUTS WITHOUT LOAM BORDERS (2/3)
5 HANDICAP ACCESS ROUTE DRIVEWAY APRON CRITERIA (3/3)
8 GRANITE
9 PRECAST CONCRETE CURB
10 GRANITE EDGESTONE / SLOPE CURB
11 BITUMINOUS CONCRETE CURB

DRAIN

SEE CATCHBASINS
34 MANDATORY REQUIREMENTS MANHOLE AND CATCHBASIN
35 STANDARD DRAIN MANHOLE (OLD CONSTRUCTION)
36 DRAIN MANHOLE @ DEPTH 10'+ (OLD CONSTRUCTION)
37 STANDARD DRAIN MANHOLE (CONCRETE BLOCK TYPE)
38 PRECAST CEMENT CONCRETE DRAIN MANHOLE
39 STANDARD CATCHBASIN (OLD CONSTRUCTION)
47 SHALLOW CUT MANHOLE
56 UNDERDRAIN AND HEADWALL

DRIVEWAY

1 CROSS SECTION OF STREETS
1A DRIVEWAYS, CURB AND SIDEWALKS INSTALLATIONS
2 SIDEWALK AND CURB SCHEME
5 HANDICAP ACCESS ROUTE DRIVEWAY APRON CRITERIA (3/3)

DUCT

1 CROSS SECTION OF STREETS
29 TRENCH REPAIR & PAVEMENT SECTION DETAIL (1/2)
30 TRENCH REPAIR & PAVEMENT SECTION DETAIL (2/2)
64 TRAFFIC SIGNAL MAST ARM FOUNDATION
65 TRAFFIC SIGNAL STANDARD FOUNDATION
65 TRAFFIC SIGNAL HAND HOLES

FENCES

58 WIRE FABRIC FENCE
59 CONCRETE STAIRS
60 STEEL POST/STEEL HANDRAIL SUPPORT FOR HANDICAP RAMPS
61 WOODEN BARRIER

HEADWALL

56 UNDERDRAIN AND HEADWALL
57 CONCRETE AND MASONRY WALLS

HANDICAP RAMP

2 SIDEWALK AND CURB SCHEME
3 CEMENT CONCRETE CURB CUTS WITH LOAM BORDERS (1/3)
4 CEMENT CONCRETE CURB CUTS WITHOUT LOAM BORDERS (2/3)
5 HANDICAP ACCESS ROUTE DRIVEWAY APRON CRITERIA (3/3)
60 STEEL POST/STEEL HANDRAIL SUPPORT FOR HANDICAP RAMPS

MANHOLES

DRAIN

27 PIPE/PIPE RETROFIT CONNECTIONS
28 INVERT AND BASE FOR RETROFIT MANHOLES
34 MANDATORY REQUIREMENTS MANHOLE AND CATCHBASIN
35 STANDARD DRAIN MANHOLE (OLD CONSTRUCTION)
36 DRAIN MANHOLE @ DEPTH 10'+ (OLD CONSTRUCTION)
37 STANDARD DRAIN MANHOLE (CONCRETE BLOCK TYPE)
38 PRECAST CEMENT CONCRETE DRAIN MANHOLE
47 SHALLOW CUT MANHOLE

SEWER

27 PIPE/PIPE RETROFIT CONNECTIONS
28 INVERT AND BASE FOR RETROFIT MANHOLES
34 MANDATORY REQUIREMENTS MANHOLE AND CATCHBASIN
47 SHALLOW CUT MANHOLE
48 STANDARD SEWER MANHOLE (OLD CONSTRUCTION)
49 SPECIAL SEWER MANHOLE- DEPTH 10'+ (OLD CONSTRUCTION)
50 RETROFIT SEWER MANHOLE OVER UNDERDRAIN
51 PRECAST CEMENT CONCRETE SEWER MANHOLE & OUTSIDE DROP
52 SEWER INVERT TABLE PLAN
53 SEWER SERVICE INTERIOR DROP MANHOLE
54 SEWER LIFT STATION (TYPICAL 4 BEDROOM SINGLE FAMILY)
55 STANDARD M.D.C. CATCHBASIN AND GASOLINE TRAP

METER POSTS

1 CROSS SECTION OF STREETS
13 SIGN AND METER POSTS

PAVEMENTS

1 CROSS SECTION OF STREETS
1A DRIVEWAYS, CURB AND SIDEWALKS INSTALLATIONS
2 SIDEWALK AND CURB SCHEME
3 CEMENT CONCRETE CURB CUTS WITH LOAM BORDERS (1/3)
4 CEMENT CONCRETE CURB CUTS WITHOUT LOAM BORDERS (2/3)
5 HANDICAP ACCESS ROUTE DRIVEWAY APRON CRITERIA (3/3)
11 BITUMINOUS CONCRETE CURB
12 SIDEWALK SLAB PROTECTION
13 SIGN AND METER POSTS
14 BRICK PAVING DETAIL
15 BITUMINOUS CONCRETE ROADWAY PAVEMENTS
16 BITUMINOUS CONCRETE YIELD CHART AND PAVING RESTRICTIONS
29 TRENCH REPAIR & PAVEMENT SECTION DETAIL (2/2)
30 TRENCH REPAIR & PAVEMENT SECTION DETAIL (1/2)

PERMANENT PATCH

29 TRENCH REPAIR & PAVEMENT SECTION DETAIL (2/2)
30 TYPICAL TRENCH REPAIR & PAVEMENT SECTION DETAIL (1/2)

ROCK

7 SLOPE CONSTRUCTION INVOLVING LEDGE
20 TRENCH AND ENCASEMENT
23 PAYMENT LINES FOR ROCK EXCAVATION IN TRENCHES

SEWER

17 GRAVITY SEWER TRENCH DETAIL
19 C.D.F. (CONTROLLED DENSITY FILL) TRENCH SECTION
20 TRENCH AND ENCASEMENT
21 TRENCH SECTION UTILIZING TIMBER PLATFORM
22 PAYMENT LIMITS FOR MUCK EXCAVATION
23 PAYMENT LINES FOR ROCK EXCAVATION IN TRENCHES
24 SEWER CHIMNEY (DUCTILE IRON)
25 SEWER CHIMNEY (PVC)
26 PVC SEWER HOUSE CONNECTION
29 TRENCH REPAIR & PAVEMENT SECTION DETAIL (2/2)
30 TRENCH REPAIR & PAVEMENT SECTION DETAIL (1/2)
33 MANHOLE FRAMES AND COVERS
34 MANDATORY REQUIREMENTS MANHOLE AND CATCHBASIN
47 SHALLOW CUT MANHOLE
48 STANDARD SEWER MANHOLE (OLD CONSTRUCTION)
49 SPECIAL SEWER MANHOLE- DEPTH 10'+ (OLD CONSTRUCTION)
50 RETROFIT SEWER MANHOLE OVER UNDERDRAIN
51 PRECAST CEMENT CONCRETE SEWER MANHOLE & OUTSIDE DROP
52 SEWER INVERT TABLE PLAN
53 SEWER SERVICE INTERIOR DROP MANHOLE
54 SEWER LIFT STATION (TYPICAL 4 BEDROOM SINGLE FAMILY)
55 STANDARD M.D.C. CATCHBASIN AND GASOLINE TRAP

SIDEWALKS

SEE PAVEMENTS
1A DRIVEWAYS, CURB AND SIDEWALKS INSTALLATIONS
6 SLOPE CONSTRUCTION IN SOIL (NO LEDGE)
7 SLOPE CONSTRUCTION INVOLVING LEDGE

SIGNS

13 SIGN AND METER POSTS
66 WARNING SIGNS

INDEX

STAIRS

59 CONCRETE STAIRS

STREETS

SEE PAVEMENTS
6 SLOPE CONSTRUCTION IN SOIL (NO LEDGE)
7 SLOPE CONSTRUCTION INVOLVING LEDGE

TRAFFIC SIGNALS

64 TRAFFIC SIGNAL MAST ARM FOUNDATION
65 TRAFFIC SIGNAL STANDARD FOUNDATION
65 TRAFFIC SIGNAL HAND HOLES

TREES / SHRUBS

62 TREE PLANTING DETAILS
63 SHRUB PLANTING DETAILS

TRENCHWORK

1 CROSS SECTION OF STREETS
17 GRAVITY SEWER TRENCH DETAIL
18 WATER TRENCH DETAIL
19 C.D.F. (CONTROLLED DENSITY FILL) TRENCH SECTION
20 TRENCH AND ENCASEMENT
21 TRENCH SECTION UTILIZING TIMBER PLATFORM
22 PAYMENT LIMITS FOR MUCK EXCAVATION
23 PAYMENT LINES FOR ROCK EXCAVATION IN TRENCHES
29 TRENCH REPAIR & PAVEMENT SECTION DETAIL (2/2)
30 TRENCH REPAIR & PAVEMENT SECTION DETAIL (1/2)

UNDERDRAIN

56 UNDERDRAIN AND HEADWALL

WALLS

56 UNDERDRAIN AND HEADWALL
57 CONCRETE AND MASONRY WALLS

WATER

1 CROSS SECTION OF STREETS
18 WATER TRENCH DETAIL
20 TRENCH AND ENCASEMENT
22 PAYMENT LIMITS FOR MUCK EXCAVATION
23 PAYMENT LINES FOR ROCK EXCAVATION IN TRENCHES
67 HYDRANT SCHEME
68 BLOWOFF ASSEMBLY
69 VALVE CHAMBER FOR PIPE 12" AND UP
70 METER PIT
71 PRECAST CONCRETE METER PIT
72 METER PIT ASSEMBLY WITH BYPASS
73 THRUST BLOCKS CONFIGURATIONS
74 WATER SERVICE CONFIGURATIONS

	LAYOUT WIDTH	PAVEMENT WIDTH	CROWN
(NEW SUBDIVISION)	40'	24'	4"
	45'	29'	$4\frac{1}{2}$"
	50'	34'	5"

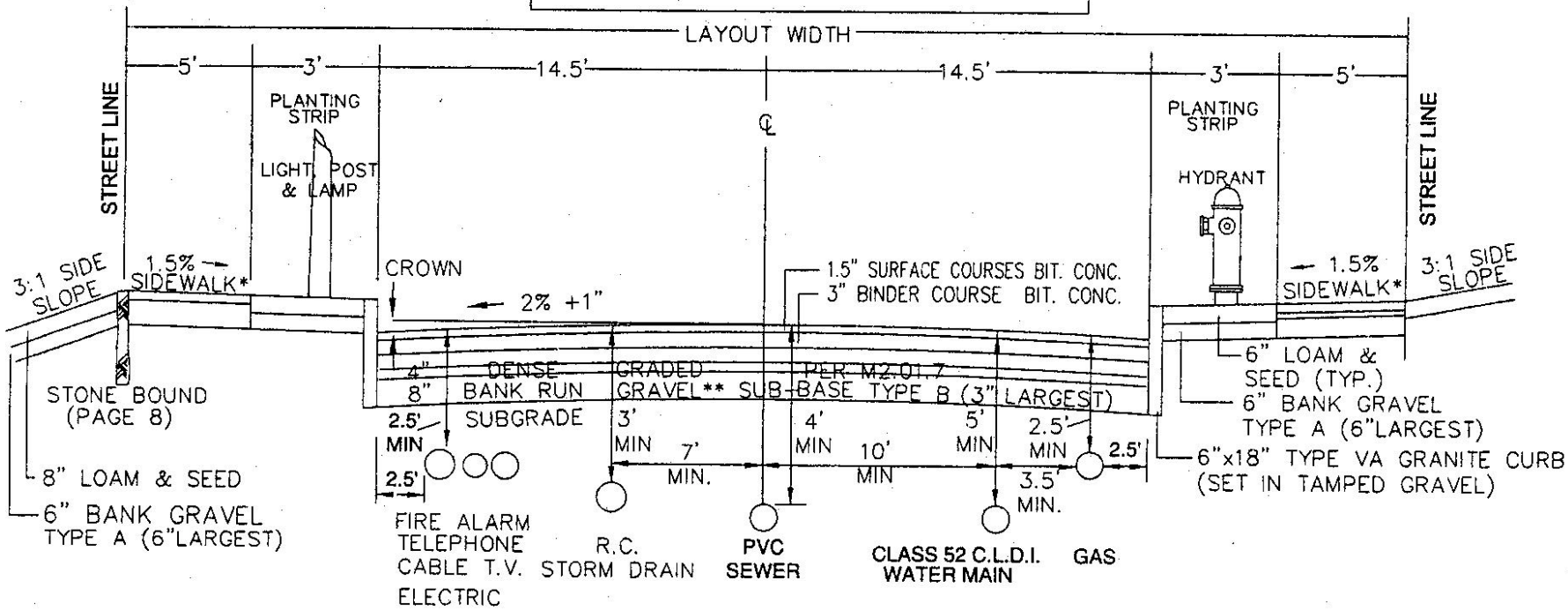

ALL SOIL STRATA ARE TO BE COMPACTED TO 95% DENSITY

* SIDEWALK NOTES: 6" GRAVEL (8" AT DRIVEWAYS) AND 2" DENSE GRADED CRUSHED STONE TO LEVEL (BANK RUN GRAVEL MUST CONFORM TO M1.03.0 OF THE STANDARD SPECIFICATIONS)

4" CEMENT CONCRETE WITH LAMPBLACK (6" AT DRIVEWAYS, 8" AS DIRECTED)

BITUMINOUS CONCRETE WALKS IN THE PUBLIC WAY ONLY AS DIRECTED

3" BITUMINOUS CONCRETE ($1\frac{3}{4}$" BINDER & $1\frac{1}{4}$" TOP)

4" BINDER COURSE REQUIRED IN BUSINESS/INDUSTRIAL SUBDIVISIONS.

** 6" MINIMUM RECLAMATION MATERIAL ON STREETS WHERE THE EXISTING BIT. ROADWAY IS RECLAIMED

1

TYPICAL CROSS SECTION OF STREETS

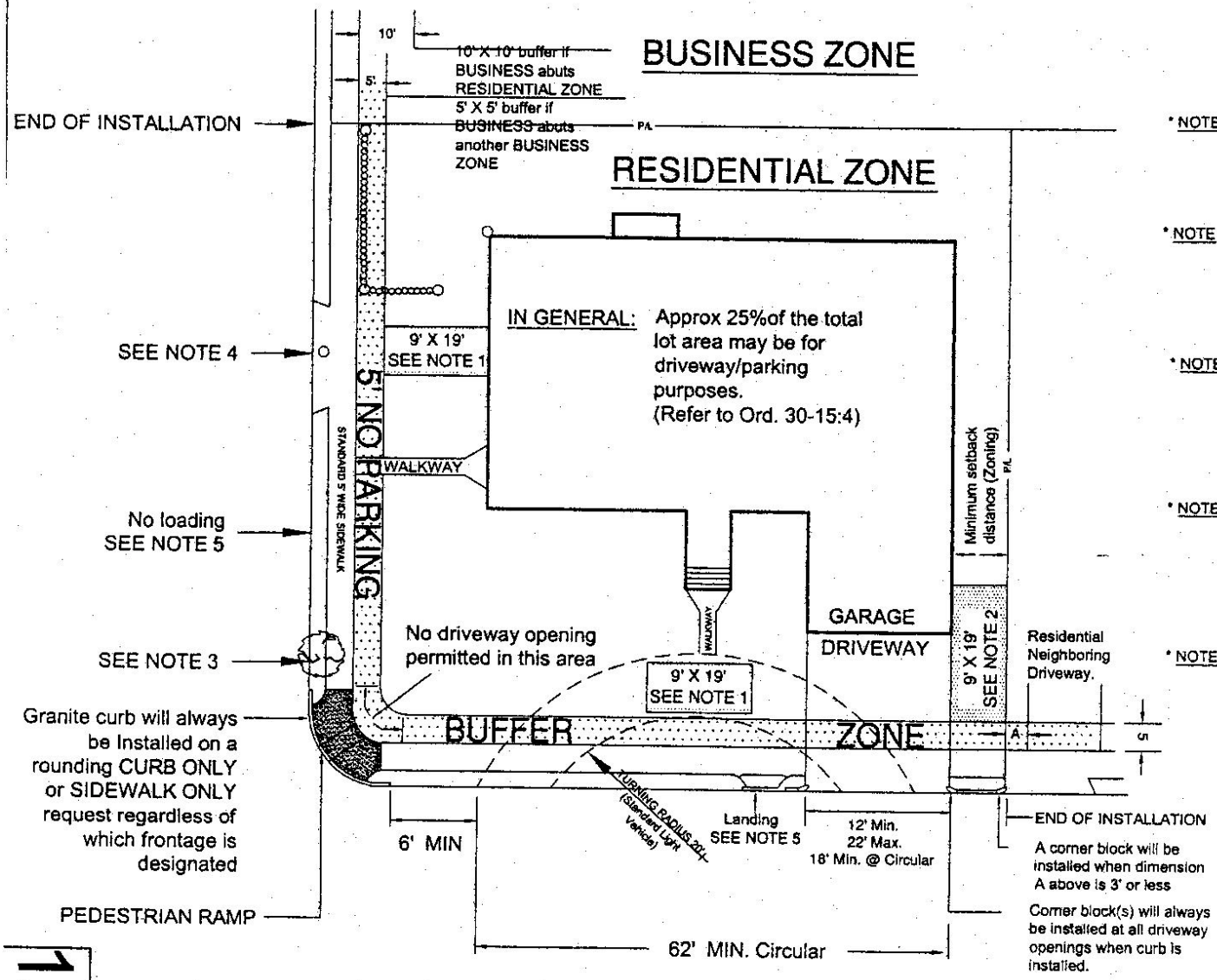

ALL: This graphic represents the standards upon which the ENGINEERING DIVISION bases its estimates and driveway feasibility assessments.

No driveway opening will be installed unless the designated (9'x19') minimum footprint is clear of any obstructions and is readily accessible.

In those situations where the minimum standards are not clearly met then the applicant must first consult with INSPECTIONAL SERVICES for clarification of feasibility and possible SPECIAL PERMIT procedures.

Curb cut/street opening permits required for MASS DPW before installation of drive on Needham St. or Rt. 9.

* NOTE 1: CIRCULAR OR STANDARD PULL-IN DRIVEWAY

Compliance with minimum dimensional and/or open space restrictions will allow for a single or double drive opening to be installed.

* NOTE 2: PULL-IN DRIVE (9'x19') IN A MINIMUM SETBACK ZONE

Compliance with minimum dimensional and/or open space standards will allow for a pull-in drive opening when approved by the INSPECTIONAL SERVICES DEPARTMENT.

* NOTE 3: TREE AND/OR STUMP REMOVAL

Tree and /or stump removals must be arranged by the applicant by contacting the City of Newton FORESTY DEPT.
No betterment work will be undertaken until the obstruction has been removed.

* NOTE 4: UTILITY RELOCATIONS

Utility relocation (pole, hydrant, sign, etc.) must be arranged by the applicant by contacting the governing UTILITY AGENCY.
All costs to relocate any and all utilities will be undertaken until the obstruction has been removed.

* NOTE 5: LANDING

Only one landing per household unless otherwise approved. Granite curb will always be Installed when cement concrete sidewalk is request.

* ORDINANCE REFERENCES:

30-1	@ Driveway
30-15:4	@ Open space
30-19:g	@ Parking /less than 5 stalls

1A

DRIVEWAY, CURB AND SIDEWALKS INSTALLATIONS

IMPORTANT NOTES:

- REFER TO PAGE 1 FOR SIDEWALK SECTION.
- CEMENT CONCRETE IS SHOWN, SCHEME APPLIES TO BITUMINOUS CONCRETE ALSO, HOWEVER, ALL JOINTS AND SCORE MARKS ARE ELIMINATED & "TACK" AS SHOWN UNDER KEY JOINT (PG. 29/30) ALL ABUTTING ADJACENT BITUMINOUS CONCRETE PAVEMENTS.
- 2' RADIUS CORNER BLOCKS THROUGHOUT UNLESS OTHERWISE SPECIFIED.
- ALL CEMENT CONCRETE IS TO BE BROOM FINISHED.
- ALL DRIVEWAY APRONS TO BE SET 1" ABOVE ADJACENT GUTTER.

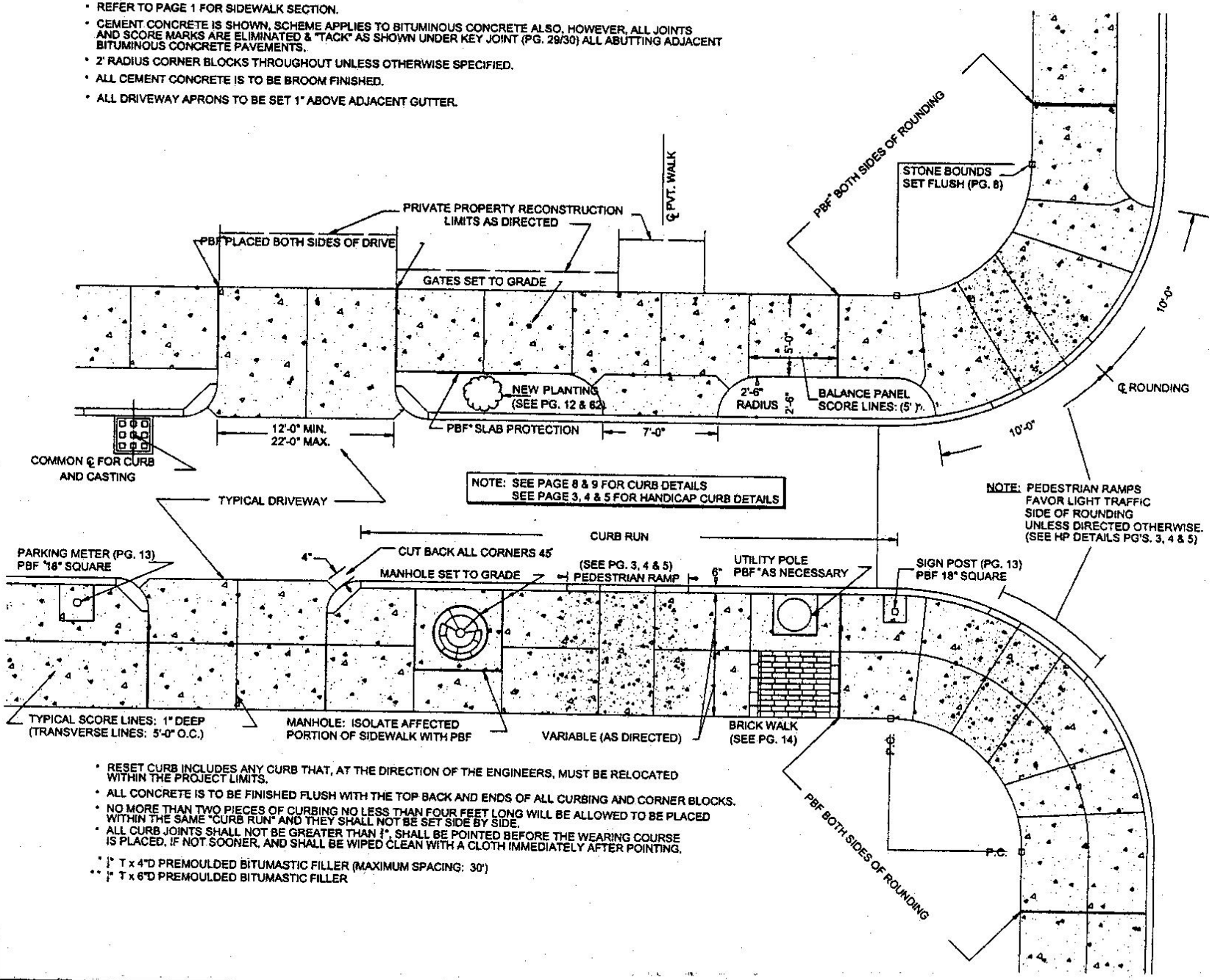

- RESET CURB INCLUDES ANY CURB THAT, AT THE DIRECTION OF THE ENGINEERS, MUST BE RELOCATED WITHIN THE PROJECT LIMITS.
- ALL CONCRETE IS TO BE FINISHED FLUSH WITH THE TOP BACK AND ENDS OF ALL CURBING AND CORNER BLOCKS.
- NO MORE THAN TWO PIECES OF CURBING NO LESS THAN FOUR FEET LONG WILL BE ALLOWED TO BE PLACED WITHIN THE SAME "CURB RUN" AND THEY SHALL NOT BE SET SIDE BY SIDE.
- ALL CURB JOINTS SHALL NOT BE GREATER THAN ½", SHALL BE POINTED BEFORE THE WEARING COURSE IS PLACED, IF NOT SOONER, AND SHALL BE WIPED CLEAN WITH A CLOTH IMMEDIATELY AFTER POINTING.

* ½" T x 4"D PREMOULDED BITUMASTIC FILLER (MAXIMUM SPACING: 30')
** ½" T x 6"D PREMOULDED BITUMASTIC FILLER

2

TYPICAL SIDEWALK AND CURB SCHEME

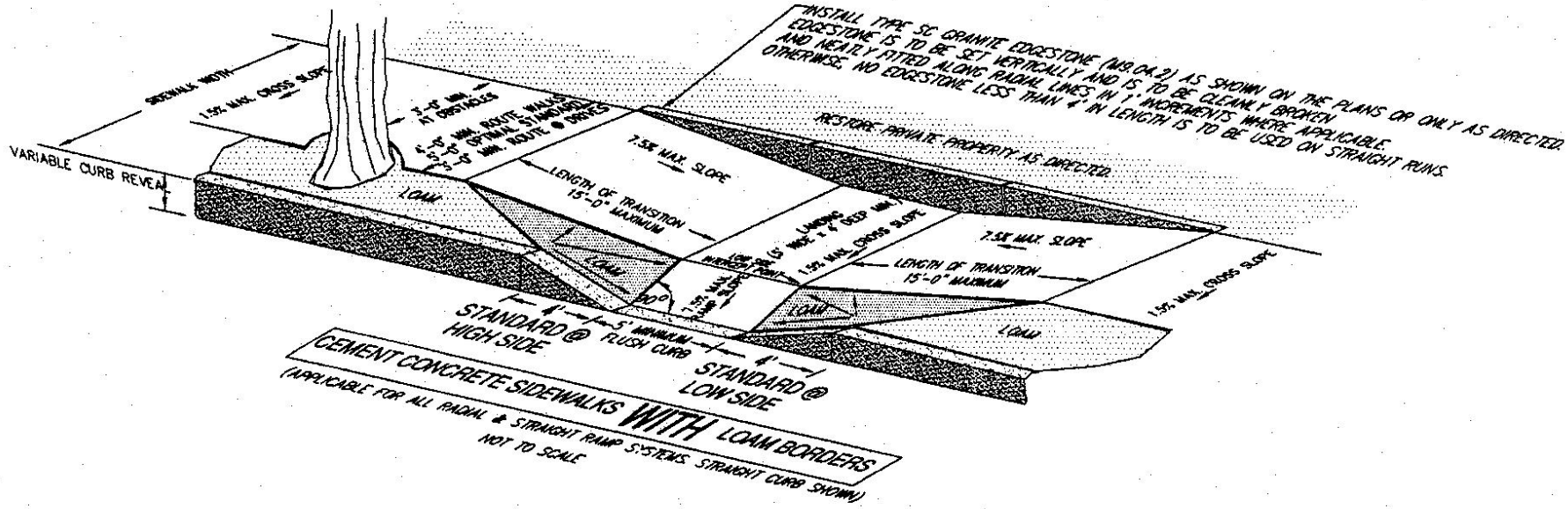

RAMPS MUST BE SET IN PAIRS.
EACH OF WHICH MUST CONFORM TO CURRENT STANDARDS.

ORDER OF OPERATIONS FOR ALL CEMENT CONCRETE RAMP INSTALLATIONS

1. FIND THE LOWEST OUTSIDE EDGE OF THE FLUSH CURB.
2. SUBTRACT THE DESIRED LANDING DEPTH FROM THE SIDEWALK WIDTH. THIS IS THE RAMP LENGTH DIMENSION.
3. DETERMINE THE HORIZONTAL AND VERTICAL DIMENSIONS FROM THE CHART
4. USING A 2' 'SMART LEVEL', AND A RIGID STRAIGHT EDGE, LAY OUT THE CHART DIMENSIONS BEGINNING AT THE LOWEST OUTSIDE FACE OF THE FLUSH CURB TO SET THE INTERCEPT POINT OF THE 7.5% AND 1.5% GRADIENTS.
5. FROM THE INTERCEPT POINT, CONTINUE USING THE 2' 'SMART LEVEL' AND RIGID STRAIGHT EDGE TO SET THE 1.5% GRADE POINT AT THE BACK OF THE LANDING.
6. SET THE FORMS, HOWEVER, THE CONTRACTOR MUST USE A 2' SMART LEVEL' DURING OPERATION TO ENSURE THAT THE FINAL LINE AND GRADE COMPLIES WITH THE NOTED DIMENSIONS AND/OR GRADIENTS.
7. DURING THE FINISHING OPERATIONS OF THE CEMENT CONCRETE, THE CONTRACTOR IS TO CHECK THE FINAL PRODUCT(S) TO ENSURE CONTINUED COMPLIANCE WITH THE NOTED STANDARDS.

SIDEWALK RAMP & LANDING (TARGET VALUES ONLY) ①

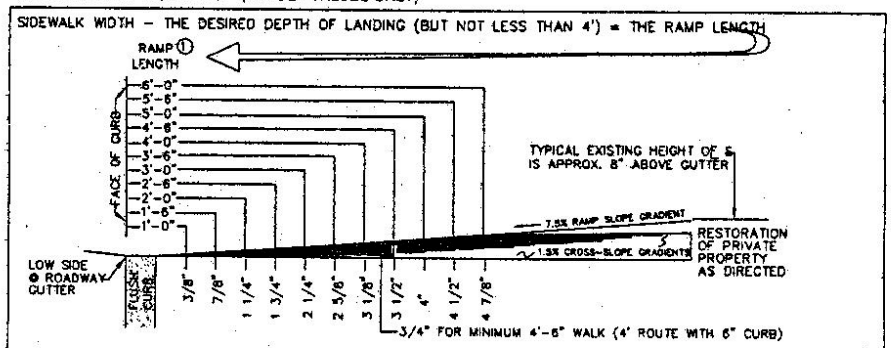

COMPOSITE ELEVATION VIEW SHOWING GRADIENT INTERCEPTS

① WHEN THE RAMP LENGTH FALLS BETWEEN THE LISTED RANGE, USE THE NEXT LOWEST RAMP LENGTH DIMENSION FINAL LAYOUT MUST NOT EXCEED THE 7.5% GRADIENT STANDARD OR THE 1.5% CROSS SLOPE STANDARD.

IMPORTANT NOTES: (APPLICABLE TO ALL CURB & RAMP SYSTEMS)

RAMPS MUST BE SET IN PAIRS. EACH OF WHICH MUST CONFORM TO CURRENT STANDARDS.

ALL DIMENSIONAL INFORMATION IS FOR GUIDELINES PURPOSES ONLY. THE FINAL PRODUCTS ROUTE CRITERIA PER THE RULES & REGULATIONS OF THE MASSACHUSETTS ARCHITECTURALACCESS BOARD AND THE AMERICANS WITH DISABILITIES ACT.

3

CEMENT CONCRETE CURB CUTS WITH LOAM BORDERS (1/3)

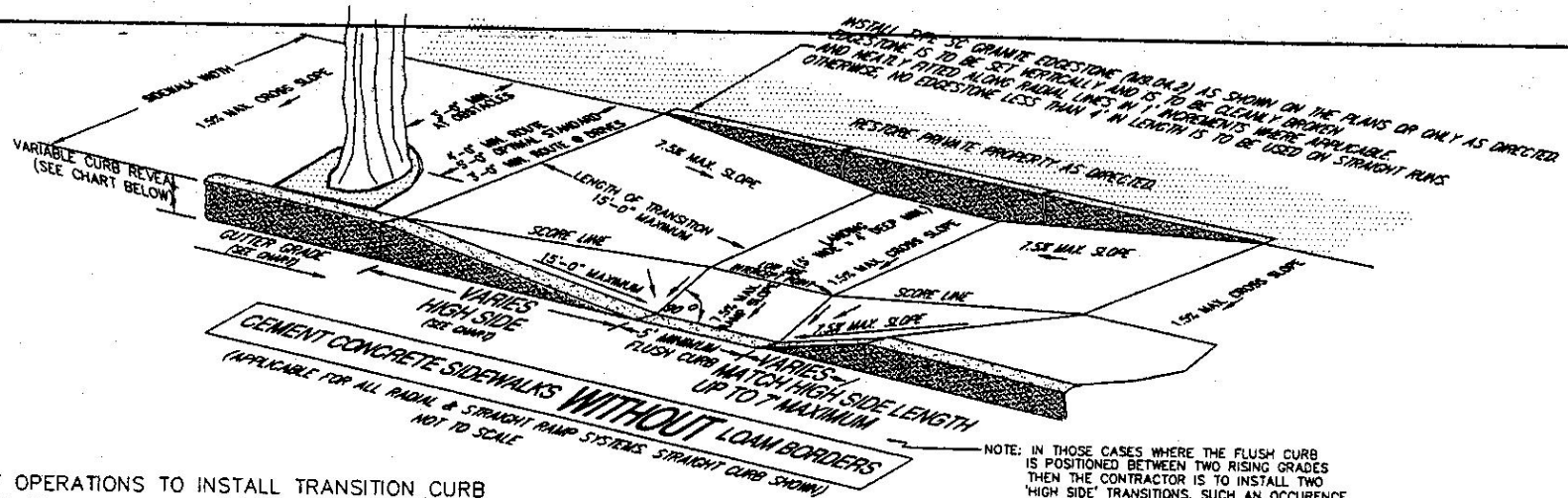

CEMENT CONCRETE SIDEWALKS WITHOUT LOAM BORDERS
(APPLICABLE FOR ALL RADIAL & STRAIGHT RAMP SYSTEMS STRAIGHT CURB SHOWN)
NOT TO SCALE

NOTE: IN THOSE CASES WHERE THE FLUSH CURB IS POSITIONED BETWEEN TWO RISING GRADES THEN THE CONTRACTOR IS TO INSTALL TWO 'HIGH SIDE' TRANSITIONS. SUCH AN OCCURENCE WILL ONLY HAPPEN WHEN THE ROADWAY ITSELF HAS BEEN DESIGNED WITH A SUPER-ELEVATED GRADE.

ORDER OF OPERATIONS TO INSTALL TRANSITION CURB AT SIDEWALKS WITHOUT LOAM BORDERS.

1. DEFINE THE FLUSH CURB LOCATION.
2. USE A 6' 'SMART LEVEL' TO DETERMINE THE EXISTING ROADWAY GRADE TO BOTH SIDES OF THE FLUSH CURB LOCATION.
3. FROM THE EXISTING FIELD CONDITIONS DETERMINE THE LENGTH OF THE 'HIGH SIDE' TRANSITION CURB FROM THE CHART.
4. WITH THE 6' 'SMART LEVEL' AND A RIGID GUIDE THAT APPROXIMATES THE SELECTED CURB LENGTH, CONDUCT A PRELIMINARY CHECK FOR REASONABLE COMPLIANCE TO THE 7.5% MAXIMUM GRADIENT STANDARD.
5. INSTALL TRANSITION CURB, HOWEVER, THE CONTRACTOR MUST USE A 2' 'SMART LEVEL' DURING THE INSTALLATION TO ENSURE THAT BOTH TRANSITION CURBS DO NOT EXCEED THE MAXIMUM 7.5% GRADIENT STANDARD. ANY ADJUSTMENTS TO THE GRADE MUST BE MADE PRIOR TO THE TAMPING AND BACKFILLING OF THE CURB.

TRANSITION CURB (TARGET VALUES ONLY) ① ②

CURB REVEAL	GUTTER GRADE %	LENGTH OF TRANSITION CURB HIGH SIDE	LENGTH OF TRANSITION CURB LOW SIDE
2"	UP TO .5	4'-0"	4'-0"
	1	4'-0"	4'-0"
	2	4'-0"	4'-0"
	3	4'-0"	4'-0"
	4	5'-0"	5'-0"
	5	7'-0"	7'-0"
	6	12'-0"	7'-0"
	7 & GREATER	15'-0" MAX.	7'-0"
3"	UP TO .5	4'-0"	4'-0"
	1	4'-0"	4'-0"
	2	4'-0"	4'-0"
	3	6'-0"	6'-0"
	4	7'-6"	7'-0"
	5	10'-0"	7'-0"
	6 & GREATER	15'-0" MAX.	7'-0"
4"	UP TO .5	5'-0"	5'-0"
	1	5'-6"	5'-6"
	2	6'-6"	6'-6"
	3	7'-6"	7'-0"
	4	10'-0"	7'-0"
	5	13'-6"	7'-0"
	6 & GREATER	15'-0" MAX.	7'-0"
5"	UP TO .5	6'-6"	6'-6"
	1	6'-6"	6'-6"
	2	8'-0"	7'-0"
	3	9'-6"	7'-0"
	4	12'-0"	7'-0"
	5 & GREATER	15'-0" MAX.	7'-0"
6"	UP TO .5	8'-0"	7'-0"
	1	8'-6"	7'-0"
	2	10'-0"	7'-0"
	3	12'-0"	7'-0"
	4 & GREATER	15'-0" MAX.	7'-0"

① WHEN ANY CHART FACTOR FALLS BETWEEN THE LISTED RANGE, USE THE NEXT HIGHEST FACTOR FOR THE LONGER TRANSITION LENGTH. FINAL LAYOUT MUST NOT EXCEED THE 7.5% GRADIENT STANDARD OR THE 1.5% CROSS SLOPE STANDARDS.

② THE MAXIMUM REQUIRED TRANSITION LENGTH OF CURB IS 15'-0"

ORDER OF OPERATIONS FOR ALL CEMENT CONCRETE RAMP INSTALLATIONS

1. FIND THE LOWEST OUTSIDE EDGE OF THE FLUSH CURB.
2. SUBTRACT THE DESIRED LANDING DEPTH FROM THE SIDEWALK WIDTH. THIS IS THE RAMP LENGTH DIMENSION.
3. DETERMINE THE HORIZONTAL AND VERTICAL DIMENSIONS FROM THE CHART
4. USING A 2' 'SMART LEVEL', AND A RIGID STRAIGHT EDGE, LAY OUT THE CHART DIMENSIONS BEGINNING AT THE LOWEST OUTSIDE FACE OF THE FLUSH CURB TO SET THE INTERCEPT POINT OF THE 7.5% AND 1.5% GRADIENTS.
5. FROM THE INTERCEPT POINT, CONTINUE USING THE 2' 'SMART LEVEL' AND RIGID STRAIGHT EDGE TO SET THE 1.5% GRADE POINT AT THE BACK OF THE LANDING.
6. SET THE FORMS, HOWEVER, THE CONTRACTOR MUST USE A 2' SMART LEVEL' DURING THIS OPERATION TO ENSURE THAT THE FINAL LINE AND GRADE COMPLIES WITH THE NOTED DIMENSIONS AND/OR GRADIENTS.
7. DURING THE FINISHING OPERATIONS OF THE CEMENT CONCRETE, THE CONTRACTOR IS TO CHECK THE FINAL PRODUCT(S) TO ENSURE CONTINUED COMPLIANCE WITH THE NOTED STANDARDS.

SIDEWALK RAMP & LANDING (TARGET VALUES ONLY) ①

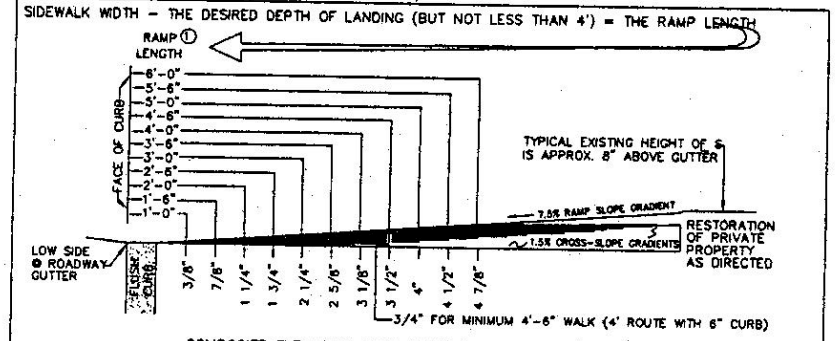

COMPOSITE ELEVATION VIEW SHOWING GRADIENT INTERCEPTS

① WHEN THE RAMP LENGTH FALLS BETWEEN THE LISTED RANGE, USE THE NEXT LOWEST RAMP LENGTH DIMENSION FINAL LAYOUT MUST NOT EXCEED THE 7.5% GRADIENT STANDARD OR THE 1.5% CROSS SLOPE STANDARD.

IMPORTANT NOTES: (APPLICABLE TO ALL CURB & RAMP SYSTEMS)

RAMPS MUST BE SET IN PAIRS. EACH OF WHICH MUST CONFORM TO CURRENT STANDARDS.

ALL DIMENSIONAL INFORMATION IS FOR GUIDELINES PURPOSES ONLY. THE FINAL PRODUCTS ROUTE CRITERIA PER THE RULES & REGULATIONS OF THE MASSACHUSETTS ARCHITECTURALACCESS BOARD AND THE AMERICANS WITH DISABILITIES ACT

4

CEMENT CONCRETE CURB CUTS WITHOUT LOAM BORDERS (2/3)

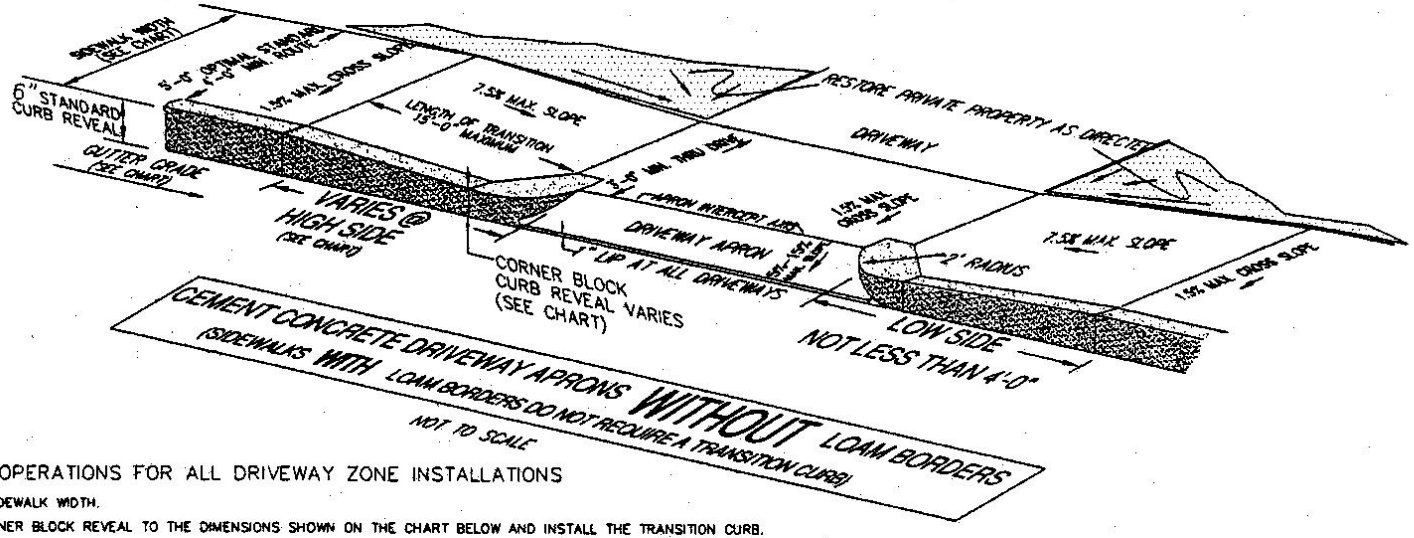

CEMENT CONCRETE DRIVEWAY APRONS WITHOUT LOAM BORDERS
(SIDEWALKS WITH LOAM BORDERS DO NOT REQUIRE A TRANSITION CURB)

NOT TO SCALE

ORDER OF OPERATIONS FOR ALL DRIVEWAY ZONE INSTALLATIONS

1. DETERMINE SIDEWALK WIDTH.
2. SET THE CORNER BLOCK REVEAL TO THE DIMENSIONS SHOWN ON THE CHART BELOW AND INSTALL THE TRANSITION CURB.
3. LOCATE THE INTERCEPT AXIS AND RE-CHECK FOR THE MINIMUM ACCESSIBLE ROUTE WIDTH.
4. SET THE 1.5% GRADIENT TO THE BACK OF THE WALK WITH A 2' SMART LEVEL' AND RIGID STRAIGHTEDGE.
5. FINE GRADE THE APRON AREA WHILE MAINTAINING THE INTERCEPT AXIS AND BACK OF SIDEWALK GRADE POINTS.
6. CHECK THE FORMS, HOWEVER, THE CONTRACTOR MUST USE A 2' SMART LEVEL' DURING OPERATIONS TO ENSURE THAT THE FINAL LINE AND GRADE COMPLIES WITH THE NOTED DIMENSIONS AND/OR GRADIENTS.
7. DURING THE FINISHING OPERATIONS OF THE CEMENT CONCRETE, THE CONTRACTOR IS TO CHECK THE FINAL PRODUCT(S) TO ENSURE CONTINUED COMPLIANCE WITH THE NOTED STANDARDS.

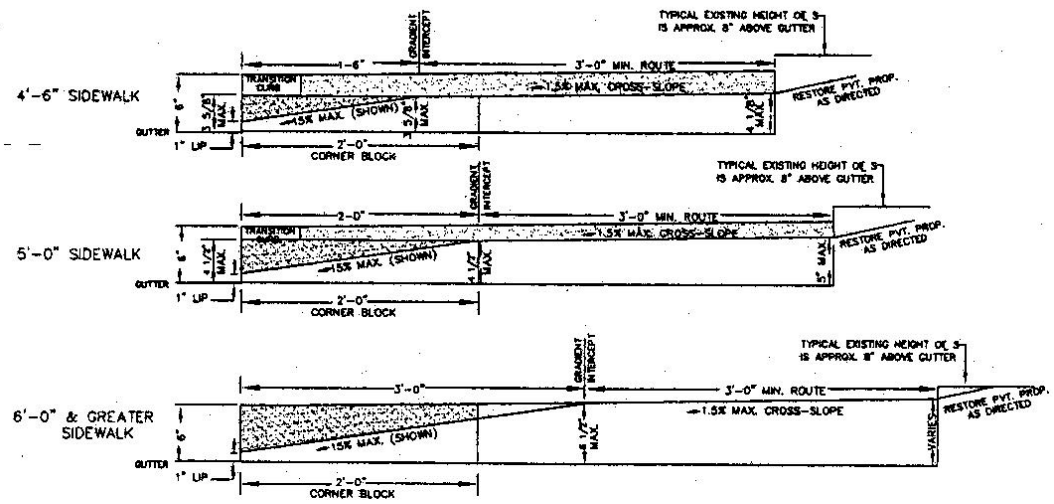

SECTION VIEW FOR THE VARIOUS WIDTHS OF DRIVEWAY

NOT TO SCALE

DRIVEWAY TRANSITIONS TO INTERCEPT 6" STD. CURB REVEAL (TARGET VALUES ONLY) ①

WALK WIDTH	CORNER BLOCK REVEAL	DISTANCE TO APRON INTERCEPT	RISE TO APRON INTERCEPT	GUTTER GRADE % ②	HIGH SIDE LENGTH OF TRANSITION CURB INCLUDING THE 2' RADIUS COR. BLK ③④
4'-6"	3 5/8" MAX.	1'-6" FIXED	3 5/8" MAX.	UP TO .5	4'-0"
				1	4'-0"
				2	4'-0"
				3	5'-0"
				4	6'-0"
				5	8'-0"
				6	13'-6"
				7 & GREATER	15'-0" MAX.
5'-0"	4 1/2" MAX.	2'-0" FIXED	4 1/2" MAX.	0-.5	4'-0"
				1	4'-0"
				2	4'-0"
				3	4'-0"
				4	4'-0"
				5	5'-6"
				6	8'-6"
				7 & GREATER	15'-0" MAX.
6'-0" & GREATER	6" STANDARD	3'-0" FIXED	6 1/2" MAX.	ALL GRADES	NO TRANSITIONS

① FINAL PRODUCT(S) MUST NOT EXCEED THE 7.5% GRADIENT OR 1.5% CROSS SLOPE STANDARDS.
② WHEN THE FACTOR FALLS BETWEEN THE LISTED RANGE, USE THE LESSER GRADIENT FACTOR.
③ THE MAXIMUM REQUIRED TRANSITION LENGTH OF CURB IS 15'-0"
④ SIDEWALKS WITH LOAM BORDERS DO NOT REQUIRE TRANSITION CURBS.

DRIVEWAY APRONS

IMPORTANT NOTE (APPLICABLE TO ALL CURB & DRIVEWAYS)

ALL DIMENSIONAL INFORMATION IS FOR GUIDELINES PURPOSES ONLY. THE FINAL PRODUCTS ROUTE CRITERIA PER THE RULES & REGULATIONS OF THE MASSACHUSETTS ARCHITECTURAL ACCESS BOARD AND THE AMERICANS WITH DISABILITIES ACT.

5

HANDICAP ACCESS ROUTE DRIVEWAY APRON CRITERIA (3/3)

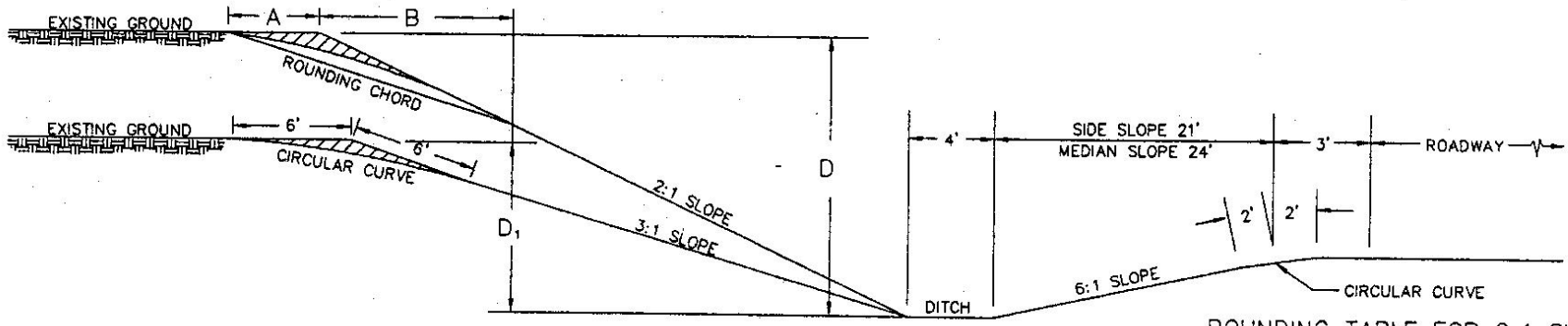

ROUNDING TABLE FOR 2:1 SLOPE

D FEET	A FEET	B FEET
3 OR LESS	1	2
4 TO 20	$\frac{D}{3}$	$\frac{2}{3}D$
OVER 20	7	14

3:1 SLOPE ROUNDING

1. WHEN "D " IS 2 FEET OR MORE ROUND AS SHOWN ABOVE.
2. WHEN "D " IS LESS THAN 2 FEET ROUND FULL LENGTH OF SLOPE.

METHOD OF ROUNDING CUT SLOPES

THE DIMENSIONS SHOWN FOR ROUNDING CUT AND FILL SLOPES ARE APPROXIMATE; THE ARE TO BE USED AS GUIDES

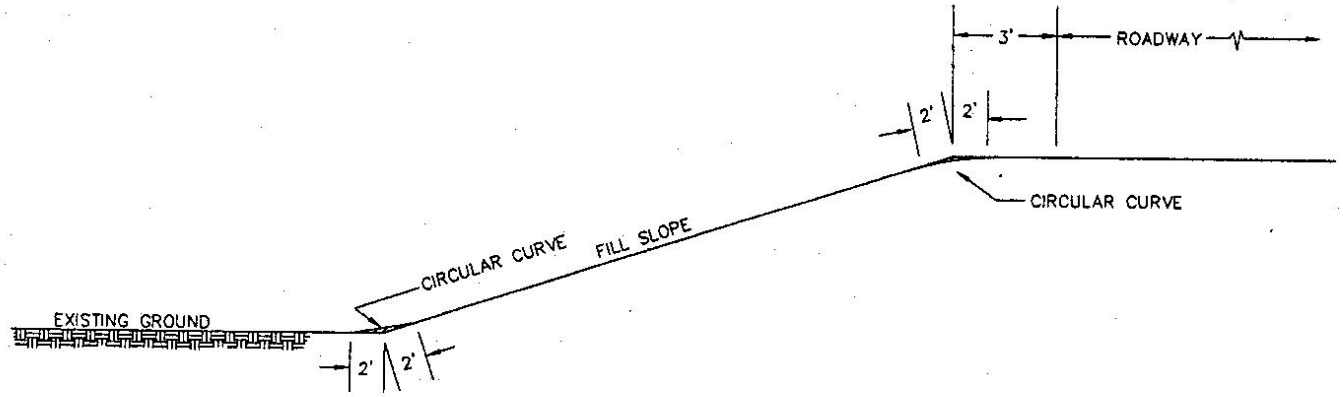

METHOD OF ROUNDING FILL SLOPES

THE DIMENSIONS SHOWN FOR ROUNDING CUT AND FILL SLOPES ARE APPROXIMATE; THE ARE TO BE USED AS GUIDES

SLOPE CONSTRUCTION IN SOIL (NO LEDGE)

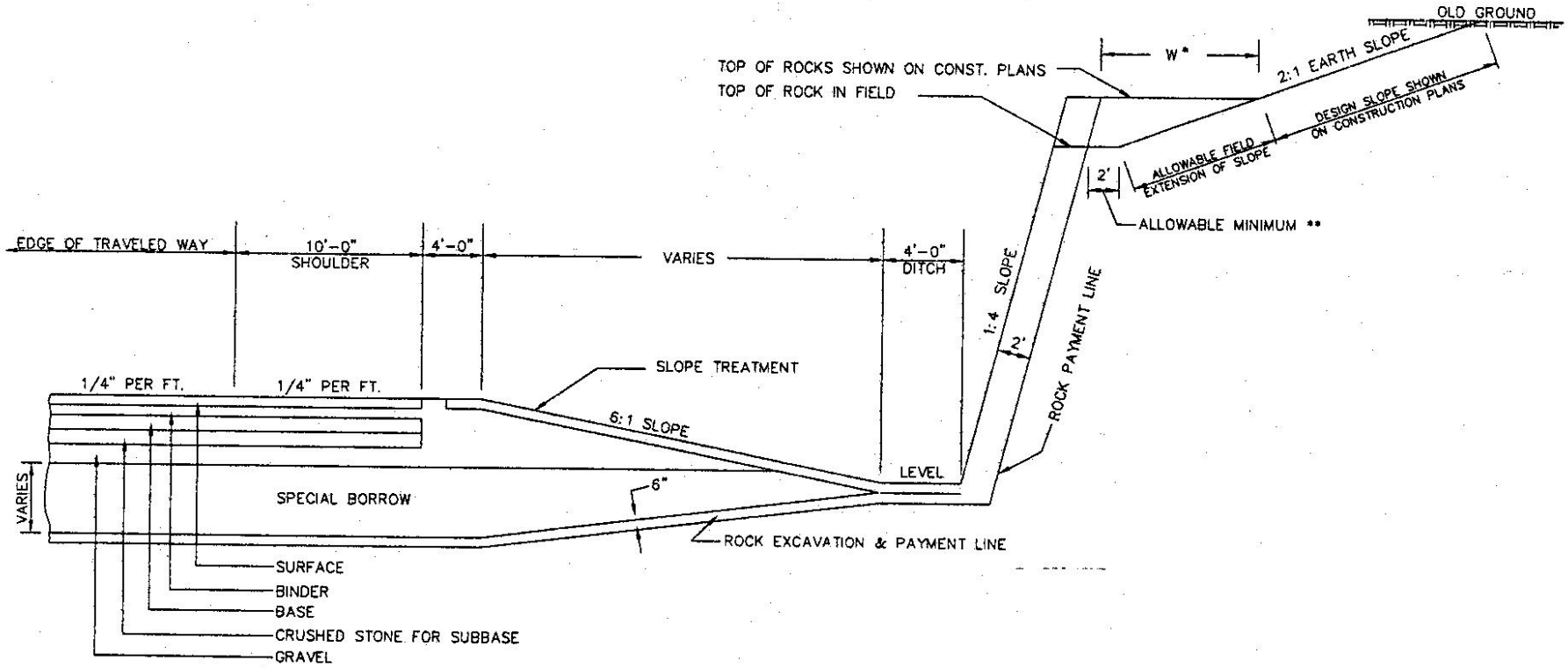

*DESIGN:
- W=12' FOR ROCK CUTS OF 20' OR LESS
- W=17' FOR ROCK CUTS 25' OR MORE
- W=VARIES 12'–17' FOR ROCK CUTS BETWEEN 20'–25', DETERMINE PROPORTIONATELY

ONLY ROCK ACTUALLY REMOVED IS PAYABLE. NO PAYMENT WILL BE MADE BEYOND THE ROCK PAYMENT LINE.

** THE EXTENSION OF THE DESIGN SLOPE IN THE FIELD IS PERMISSIBLE WITHIN THE LIMITS SHOWN (2' SHELF ON TOP OF THE ROCK), WHEN THE HEIGHT OF THE ROCK CUT IN THE FIELD IS LESS THAN THAT ON THE CONSTRUCTION PLANS).

7

SLOPE CONSTRUCTION INVOLVING LEDGE

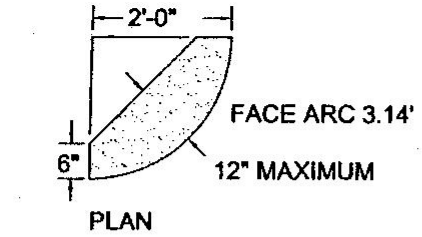

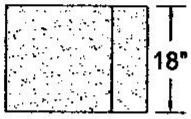

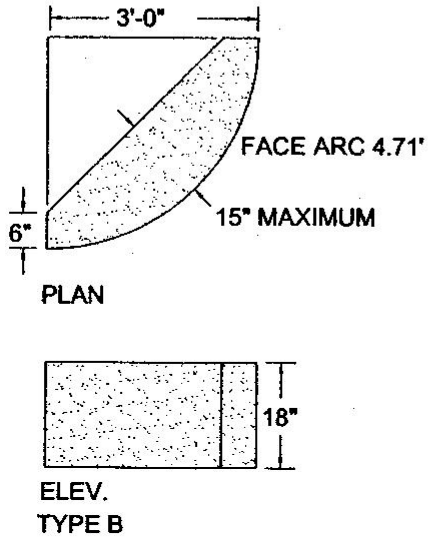

CURVED CURB CORNERS (CORNER BLOCKS)

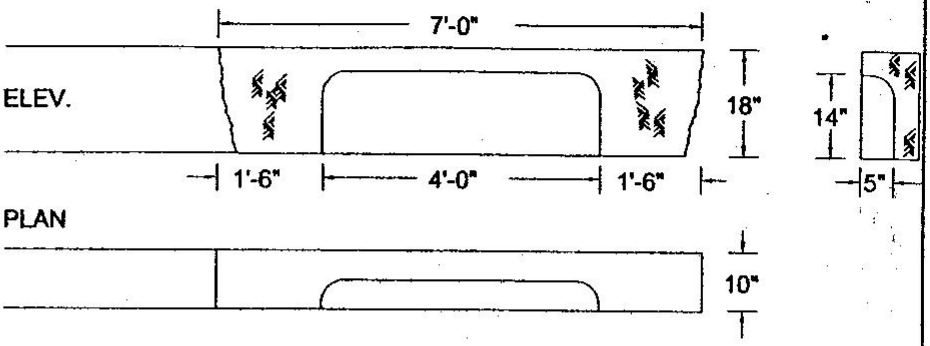

7' GRANITE CURB INLET

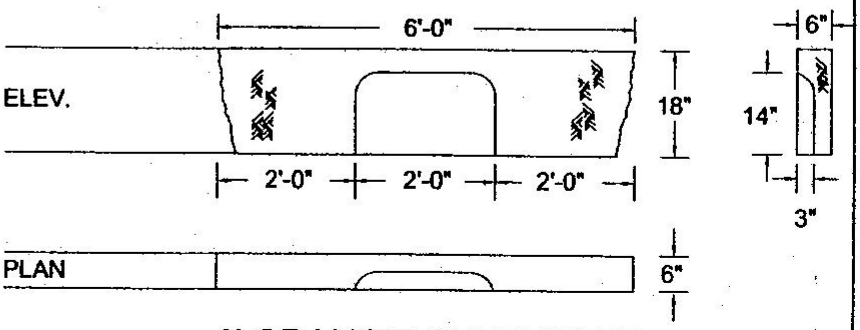

6' GRANITE CURB INLET

(STRAIGHT TYPE SHOWN)

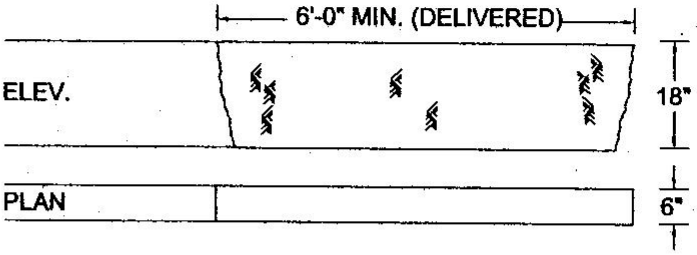

STRAIGHT AND CURVED CURB

NOTE: ALL CURBING COMPONENTS SHALL BE SPLIT FACE WITH A SAWN TOP AND BOTTOM.

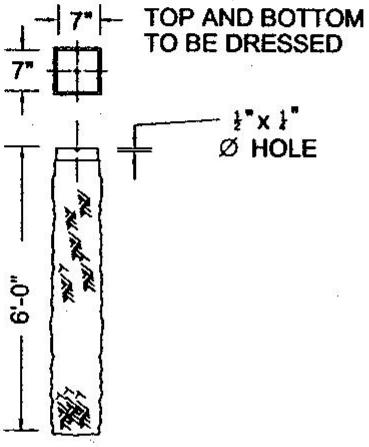

IMPORTANT NOTE:

ALL BOUNDS ARE TO BE SET ACCURATELY FROM REFERENCE POINTS GIVEN BY THE ENGINEERS. THE CONTRACTOR SHALL REMOVE AND RESET ALL BOUNDS FOUND TO BE INACCURATE.

STONE BOUNDS

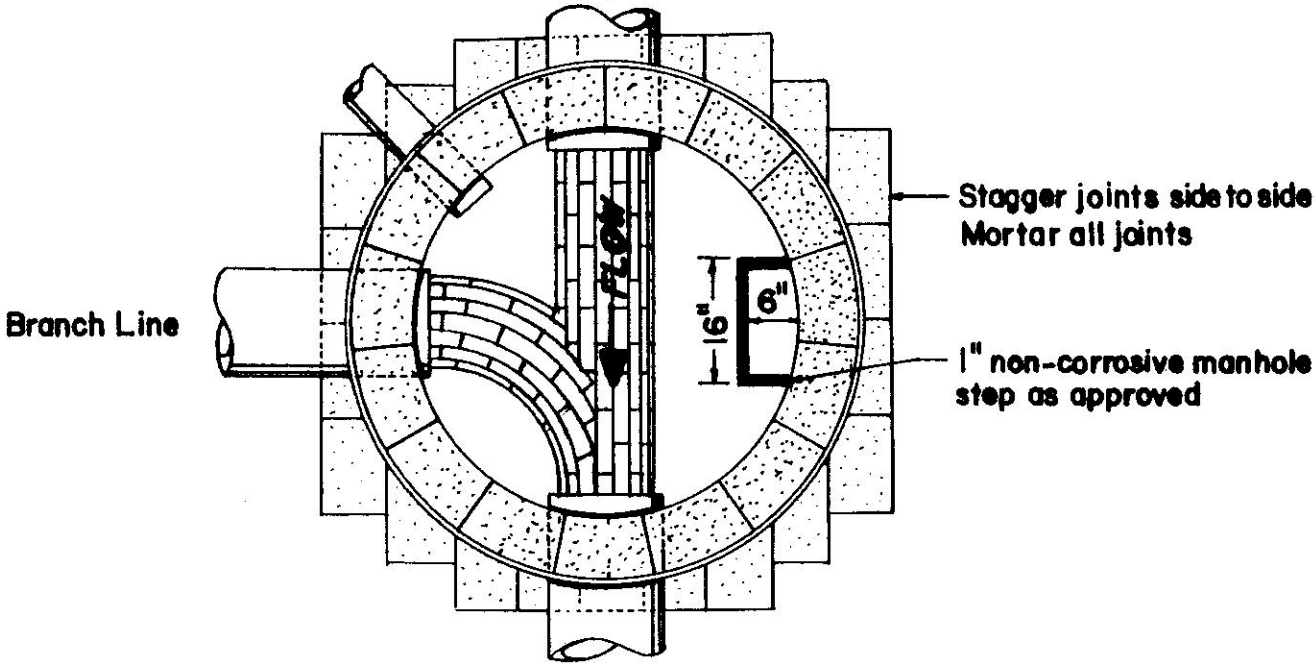

PAGE 25A APPLIES

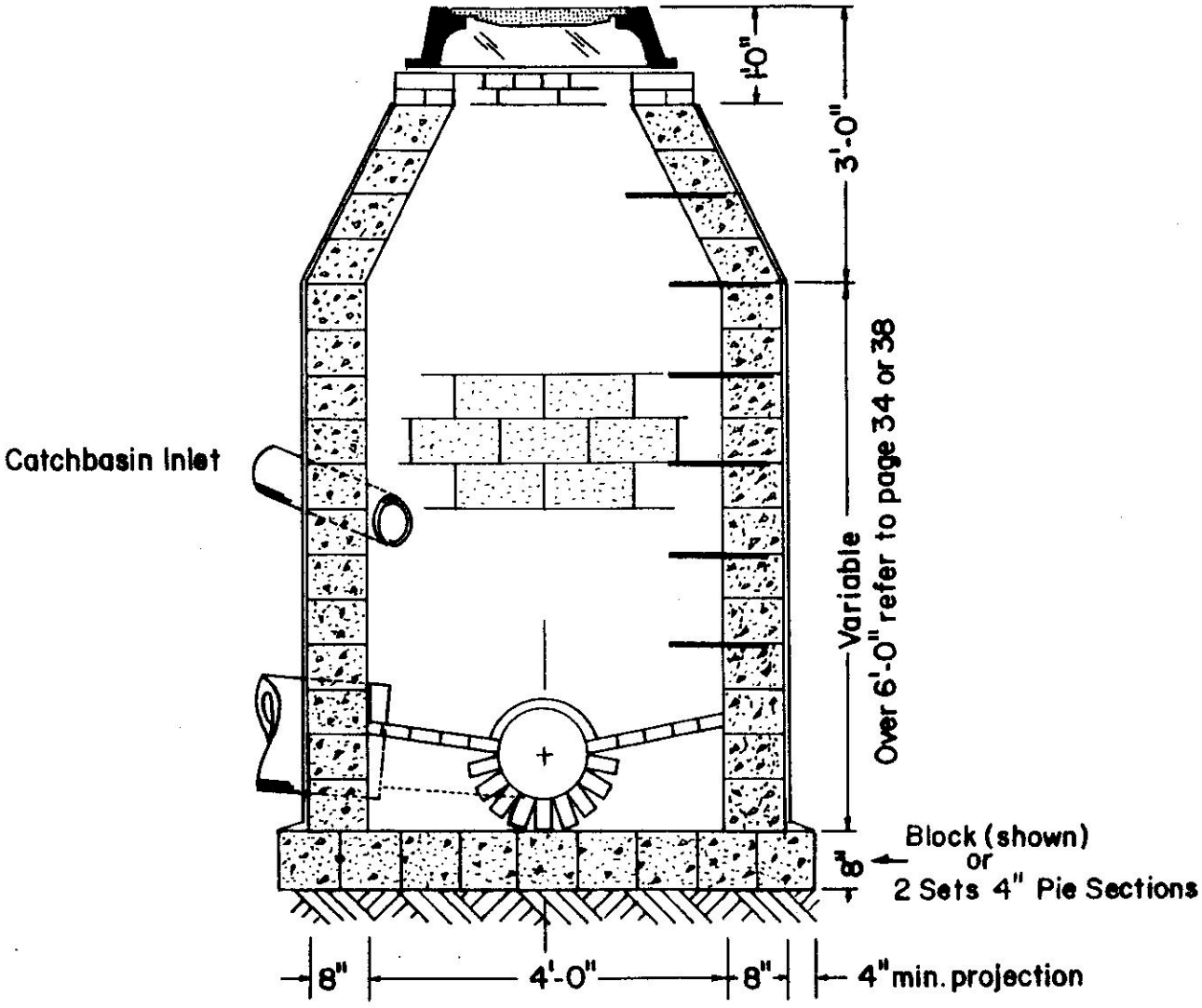

STANDARD DRAIN MANHOLE (CONCRETE BLOCK TYPE)

M. Baldi

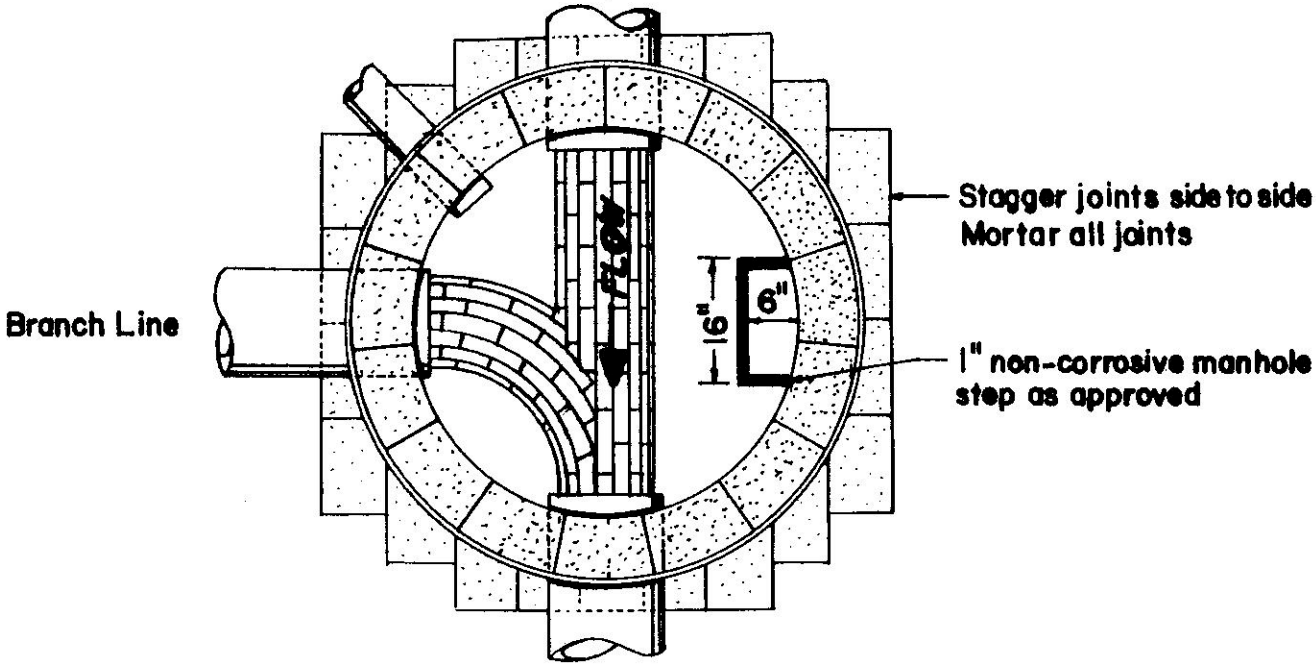

PAGE 25A APPLIES

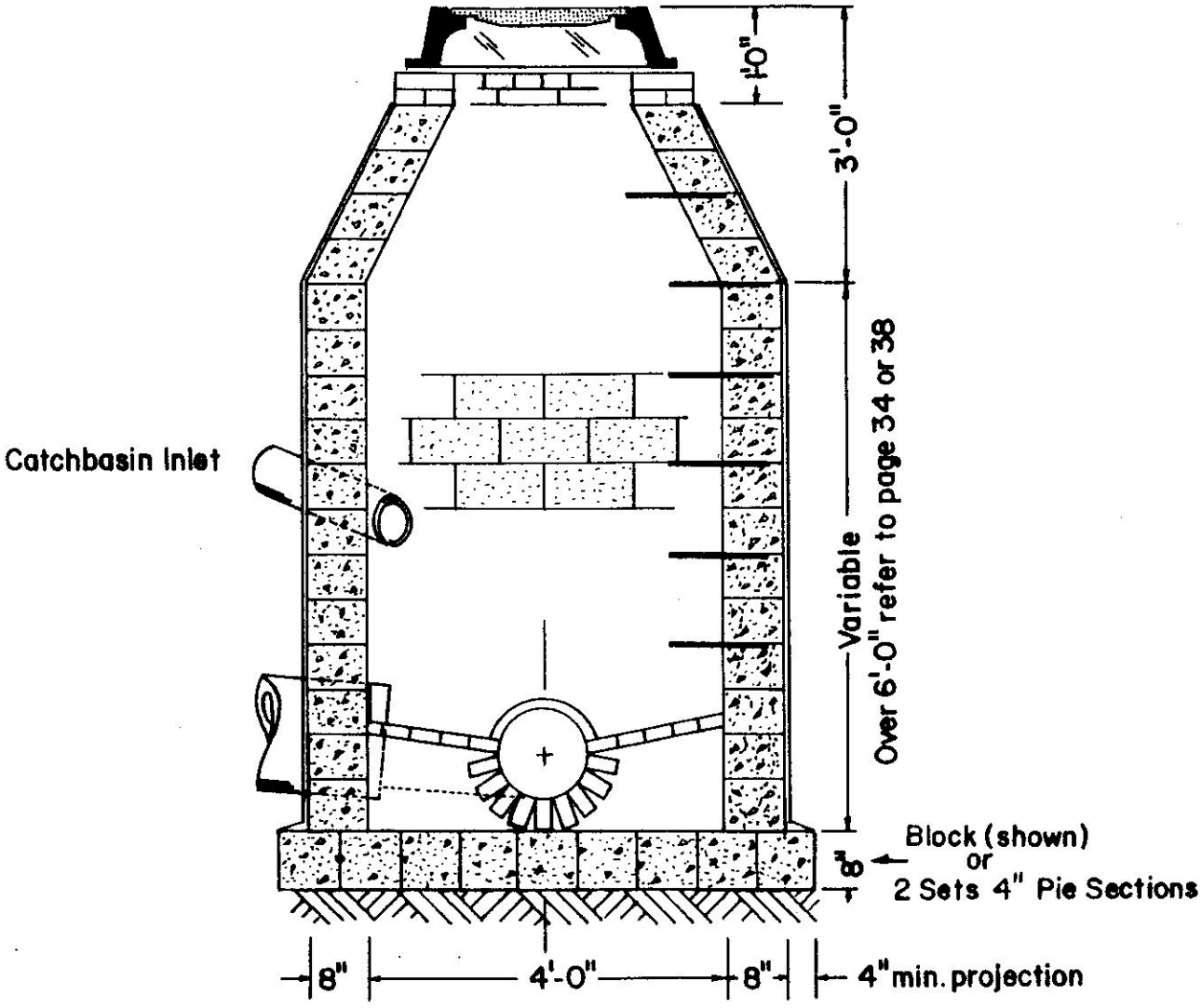

STANDARD DRAIN MANHOLE (CONCRETE BLOCK TYPE)

M. Baldi

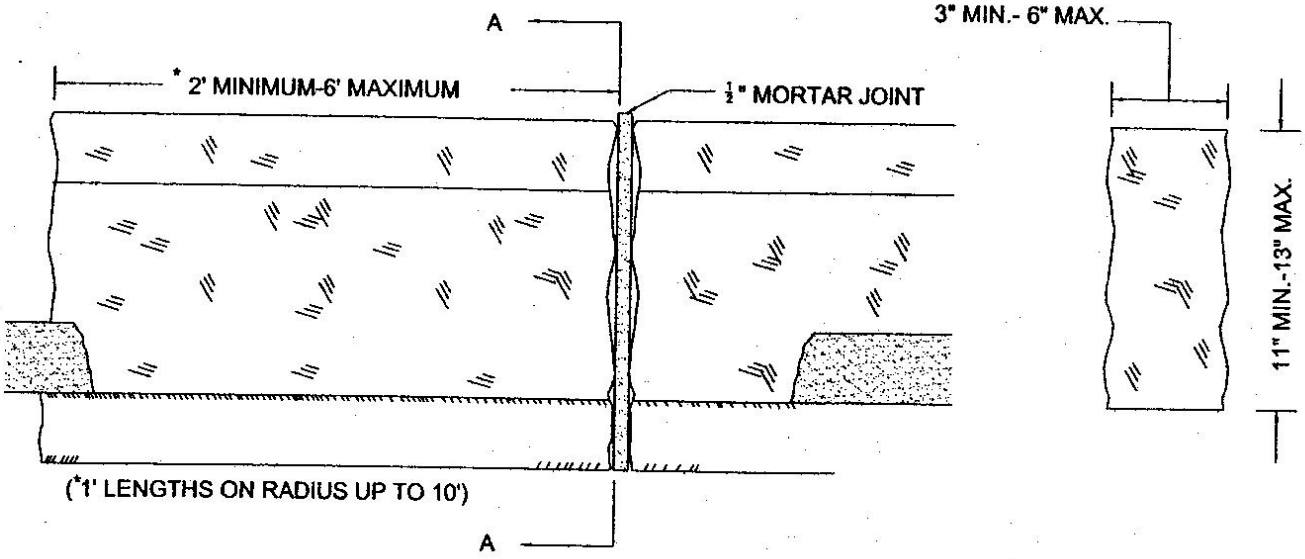

ELEVATION

END VIEW

TYPE SB EDGE CURB
SAWN TOP/SPLIT FACE

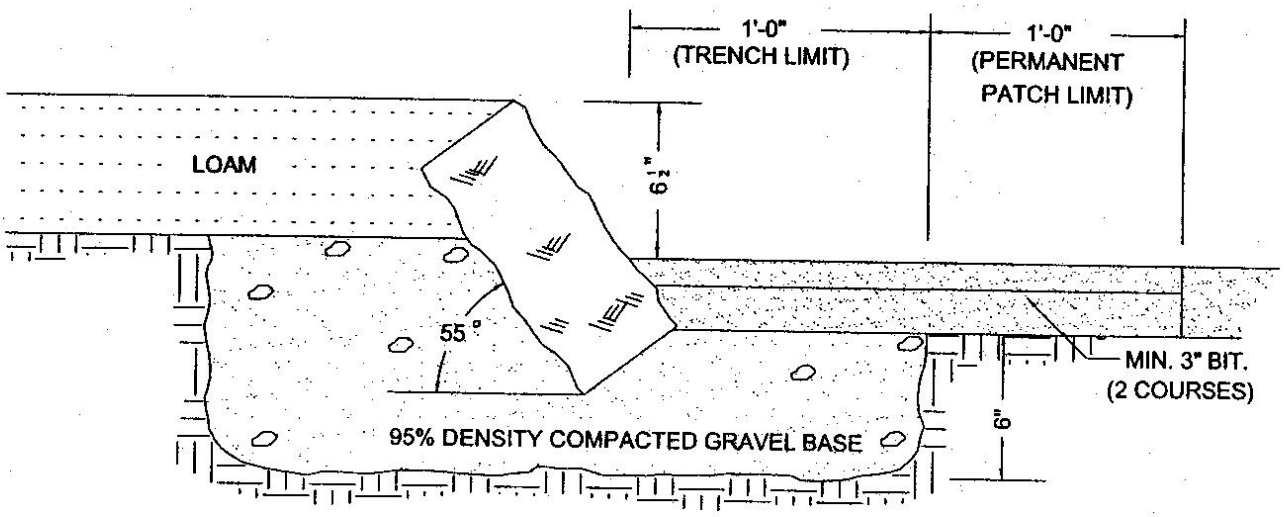

SECTION A-A

GRANITE EDGESTONE / SLOPE CURB

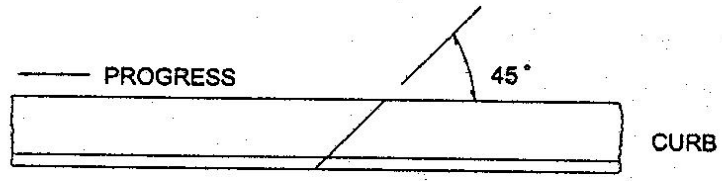

BULKHEAD CONSTRUCTION JOINT

DETAIL A

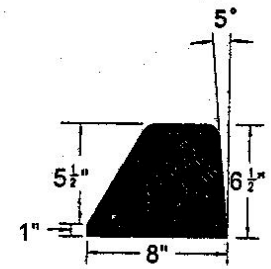

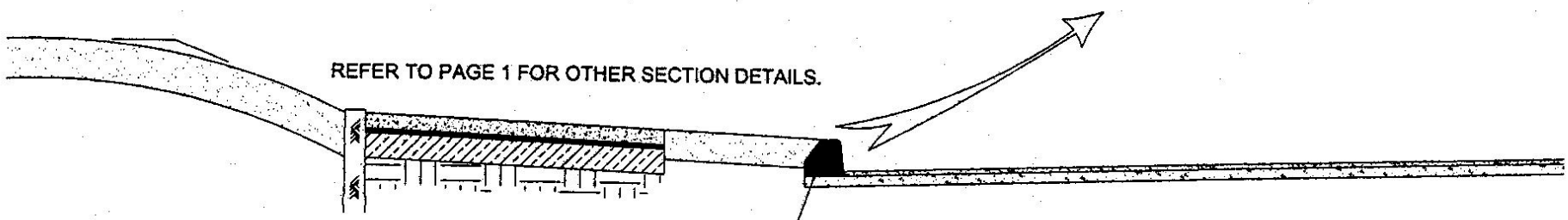

REFER TO PAGE 1 FOR OTHER SECTION DETAILS.

NOTE: CURB IS PLACED DIRECTLY ON BINDER.

SPECIFICATIONS:

1. CURB DESIGNS OTHER THAN THAT SHOWN MAY BE USED ONLY WHEN APPROVED BY THE CITY ENGINEER IN WRITING.
2. BITUMINOUS CONCRETE CURB SHALL CONSIST OF TYPE I BITUMINOUS CONCRETE CONFORMING TO SECTION M9.17.1 OF COMMONWEALTH OF MASSACHUSETTS D.P.W. STD. SPEC. HWY. & BRIDGES 1988.
3. THE PAVEMENT ON WHICH THE CURB IS TO BE SET IS TO BE SWEPT CLEAN AND A TACK COAT OF RS-1, OR OTHER BITUMEN APPROVED BY THE CITY ENGINEER IN WRITING, SHALL BE APPLIED AT THE RATE OF 0.10 GALLON PER 13 LINEAR FEET, PRIOR TO PLACEMENT OF CURBING.
4. JOINTS SHALL BE KEPT TO A MINIMUM. WHEN JOINTS ARE NECESSARY THEY SHALL BE MADE AS INDICATED IN DETAIL A ABOVE. A THIN COAT OF BITUMEN SHALL BE APPLIED TO THE EXISTING CURB IN ORDER TO INSURE A GOOD BOND AT THE JOINTS.
5. THE FINISHED CURB SHALL PRESENT AN EVEN TEXTURED APPEARANCE, WITH CLEAN SHARP LINES AND SHALL MEET A 90% COMPACTION REQUIREMENT.
6. ANY IRREGULARITIES IN THE ALIGNMENT AND/OR FINISHED SURFACES WILL NOT BE ACCEPTED.

11

BITUMINOUS CONCRETE CURB

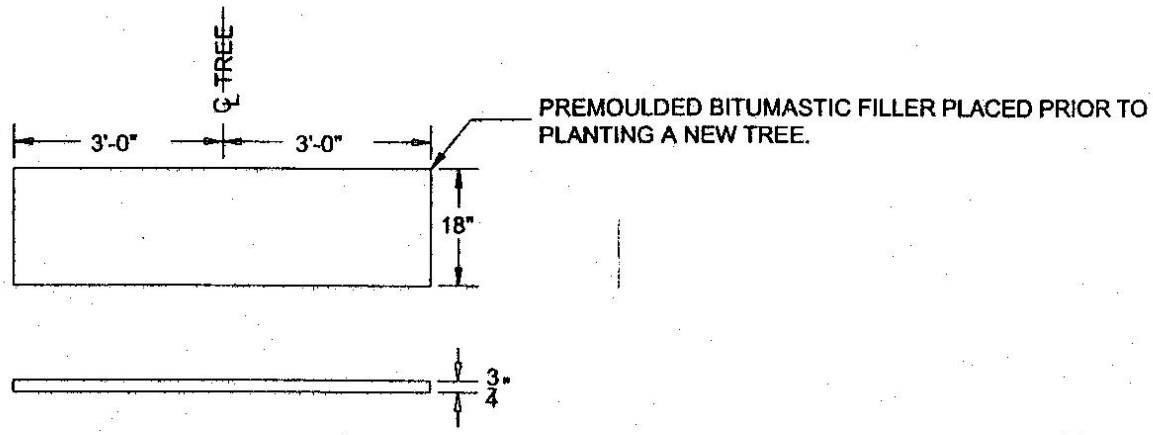

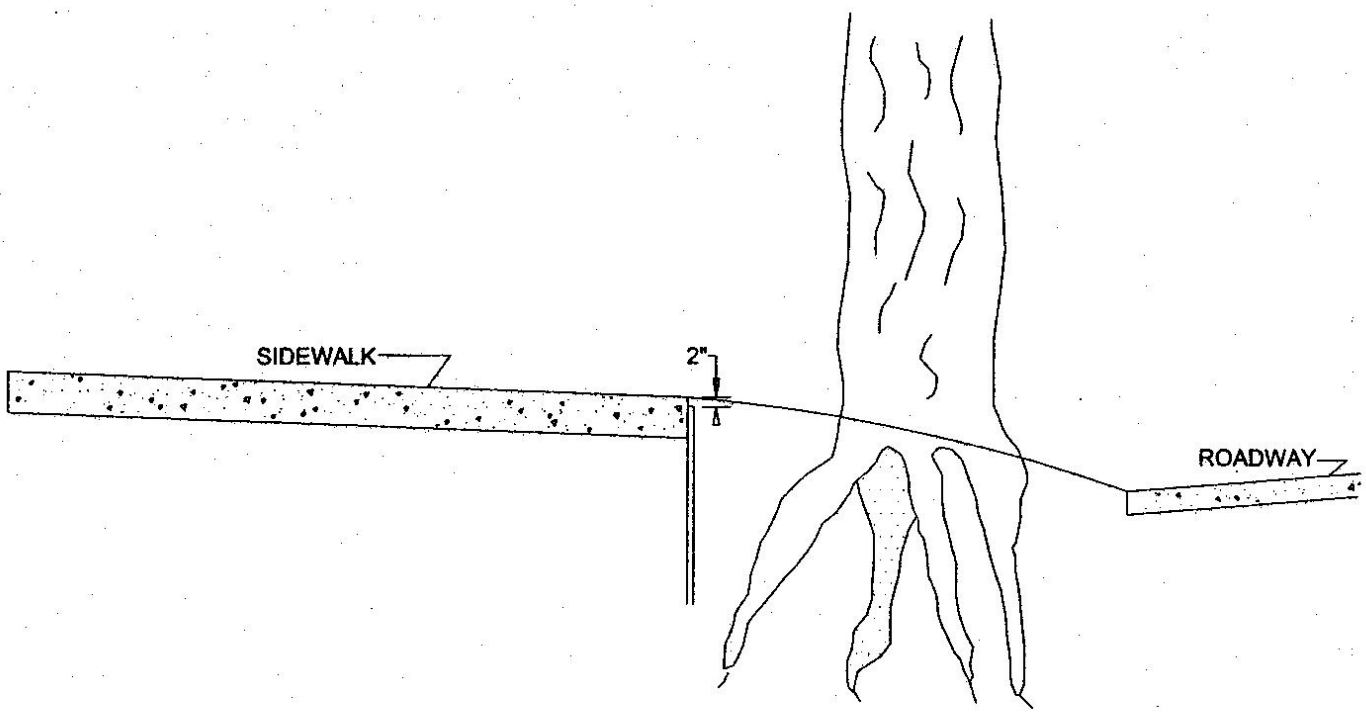

SIDEWALK SLAB PROTECTION

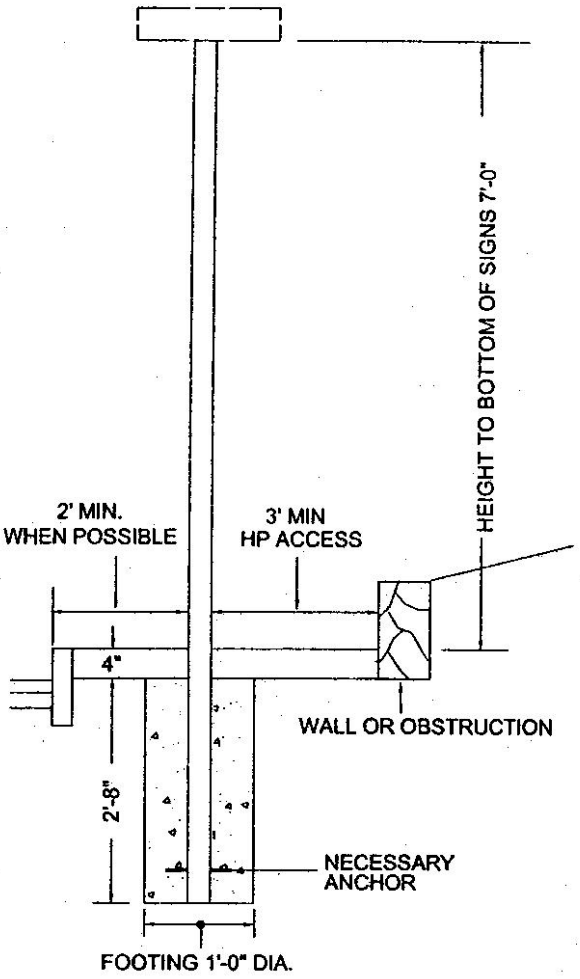

RESET SIGN

(REMOVE OLD FOOTING
& RESET AS SHOWN)

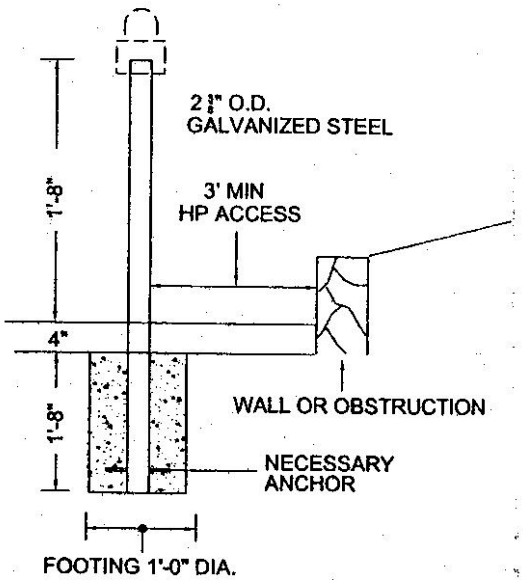

PARKING METER POST

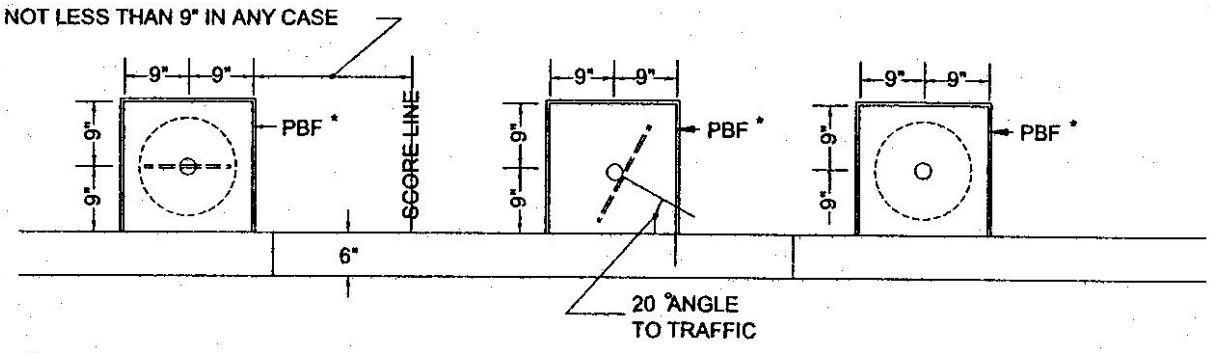

* PREMOULDED BITUMASTIC FILLER TO BE USED ONLY WHEN POST IS SET IN CEMENT CONCRETE SIDEWALKS

NOTES:

1. MIN. .091 GA. EXTRUDED ALUMINUM SIGN BLADE W/HIGH INTENSITY SHEETING (GREEN BACKGROUND WITH 4" MIN SILVER COPY AND 3/8" SILVER BORDER.)
2. EACH SIGN SHALL HAVE LEGEND ON BOTH SIDES.
3. POSTS SHALL HAVE A MIN. .64" WALL THICKNESS AND A MIN. WEIGHT OF 1.64 LBS./FT.
4. WHEN APPLICABLE: STREET SIGNS ARE REQUIRED TO BE INSTALLED BY THE DEVELOPER, FOLLOWING THE INSTALLATION OF THE BASE COURSE OF THE ROADWAY.
5. ALL SIGNS SHALL BE MAINTAINED BY THE DEVELOPER OR CONTRACTOR UNTIL ALL WAYS ARE ACCEPTED BY THE CITY.
6. ALL POSTS ARE TO BE SET PLUMB.
7. ALL FOOTINGS ARE TO BE CEMENT CONCRETE CLASS B MIN.

SIGN AND METER POSTS

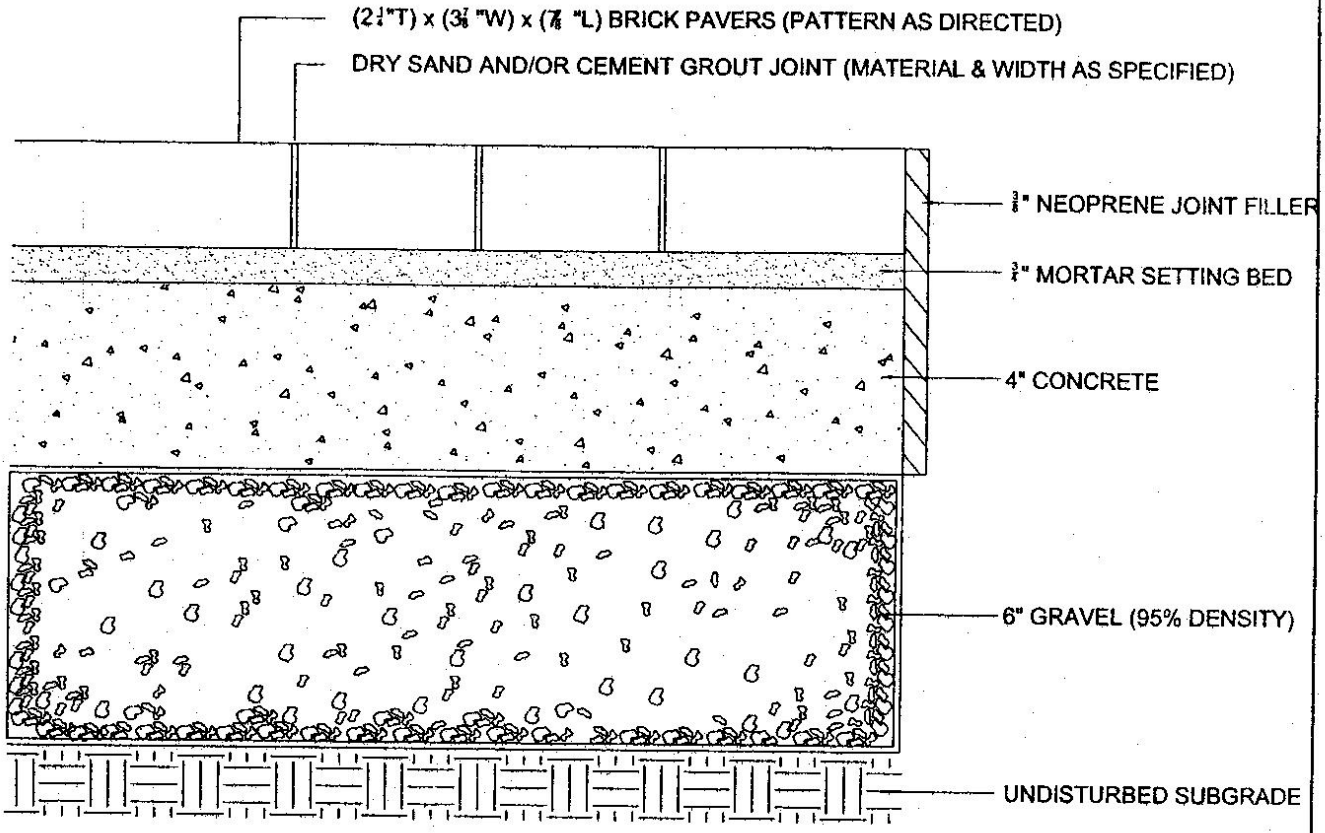

SECTION VIEW

NOTE: EXPANSION JOINTS SHALL BE INSTALLED EVERY 30' (TRANSVERSELY), OR AS OTHERWISE DIRECTED, AND SHALL EXTEND THROUGH THE BRICK AND CONCRETE COURSES.

BRICK PAVING DETAIL

EXCAVATION RECONSTRUCTION

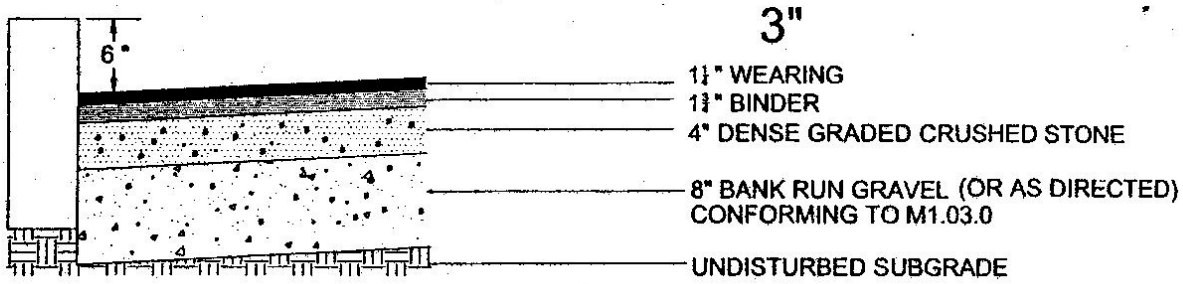

95% COMPACTION @ ALL STRATA

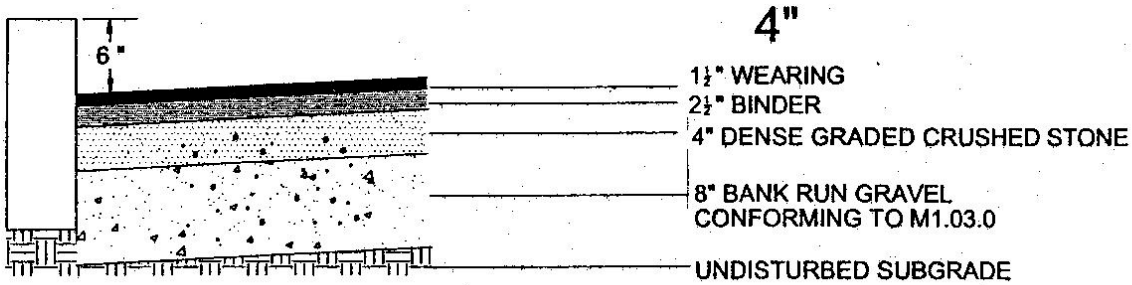

95% COMPACTION @ ALL STRATA

RECLAMATION RECONSTRUCTION

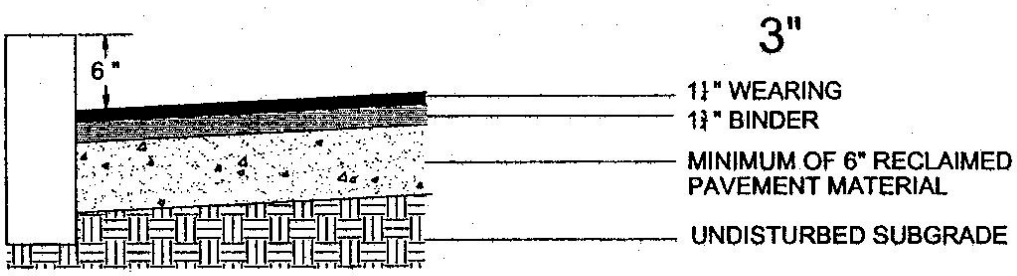

95% COMPACTION @ ALL STRATA

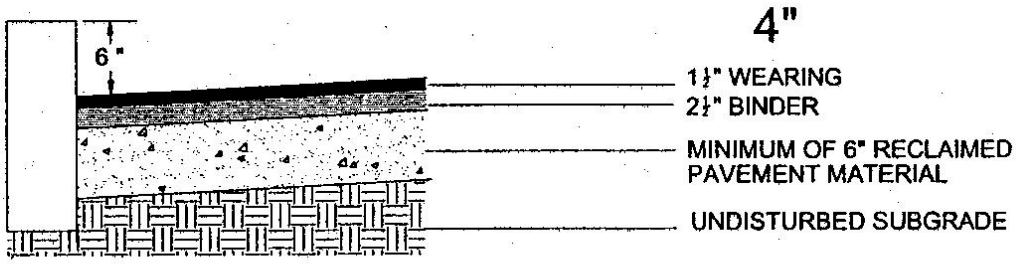

95% COMPACTION @ ALL STRATA

DEPTH (IN.)	S.Y./TON
1.00	18.2
1.25	14.6
1.50	12.1
1.75	10.4
2.50	7.3
3.00	6.1

$$\frac{1 \text{ TON} \times L' \times W'}{(\text{TABLE}) \text{ S.Y.} \times 9} = \text{TONS REQUIRED}$$

PAVING RESTRICTIONS

NO PAVING WHEN THE TEMPERATURE IN THE SHADE IS BELOW 40 F°.
APPLICATION TEMPERATURE: 225 -325 F°.
NO PAVING OVER A WET SURFACE.
ROLLER WHEEL NO LESS THAN 24" WIDE.
ROLLER REQ. 10-13 TONS

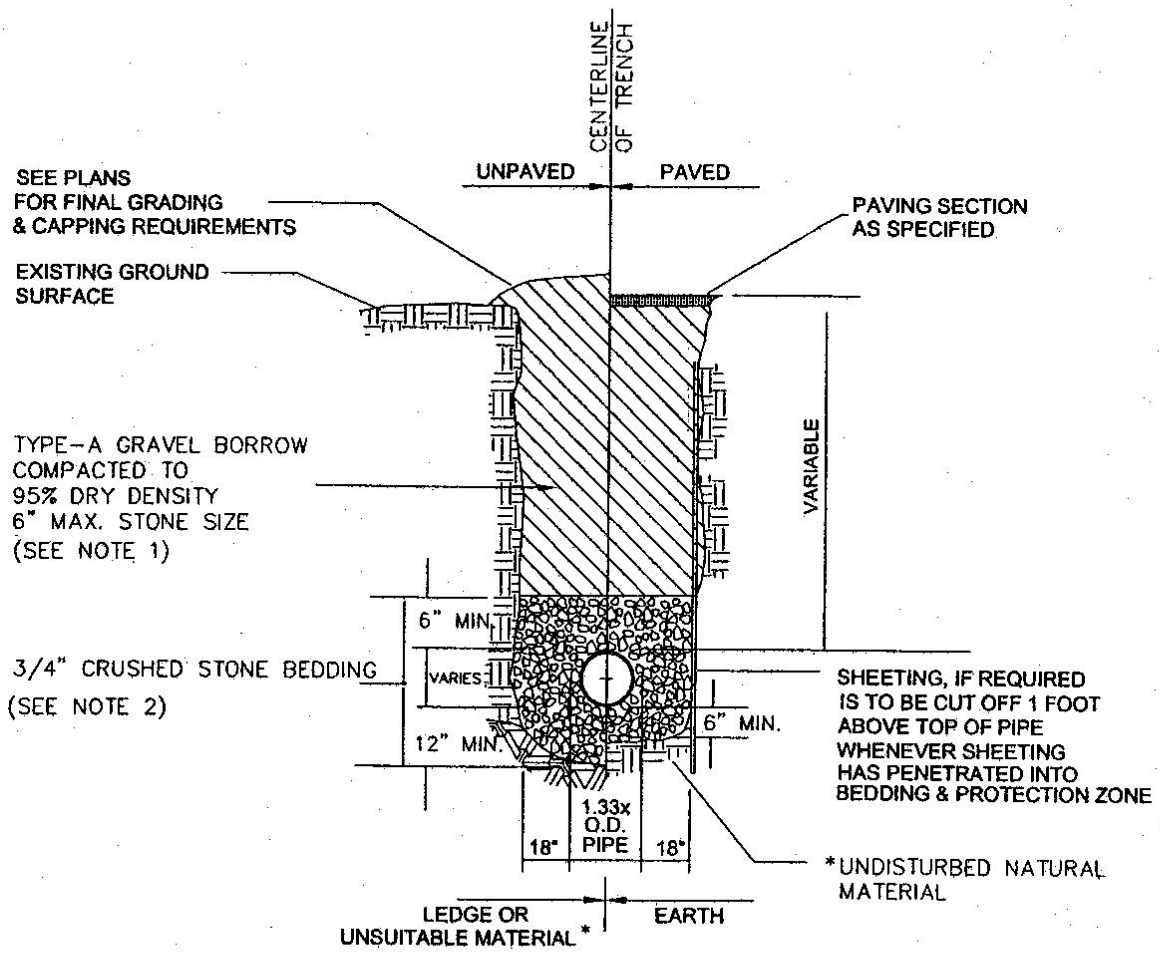

* SUITABILITY OF MATERIAL IS TO BE DETERMINED BY THE CITY OF NEWTON.

1. GRAVEL BORROW SHALL CONFORM TO MASS HIGHWAY SPECIFICATION M1.03.0
2. CRUSHED STONE BEDDING SHALL CONFORM TO MASS HIGHWAY SPECIFICATION M2.01.1

GRAVITY SEWER TRENCH DETAIL

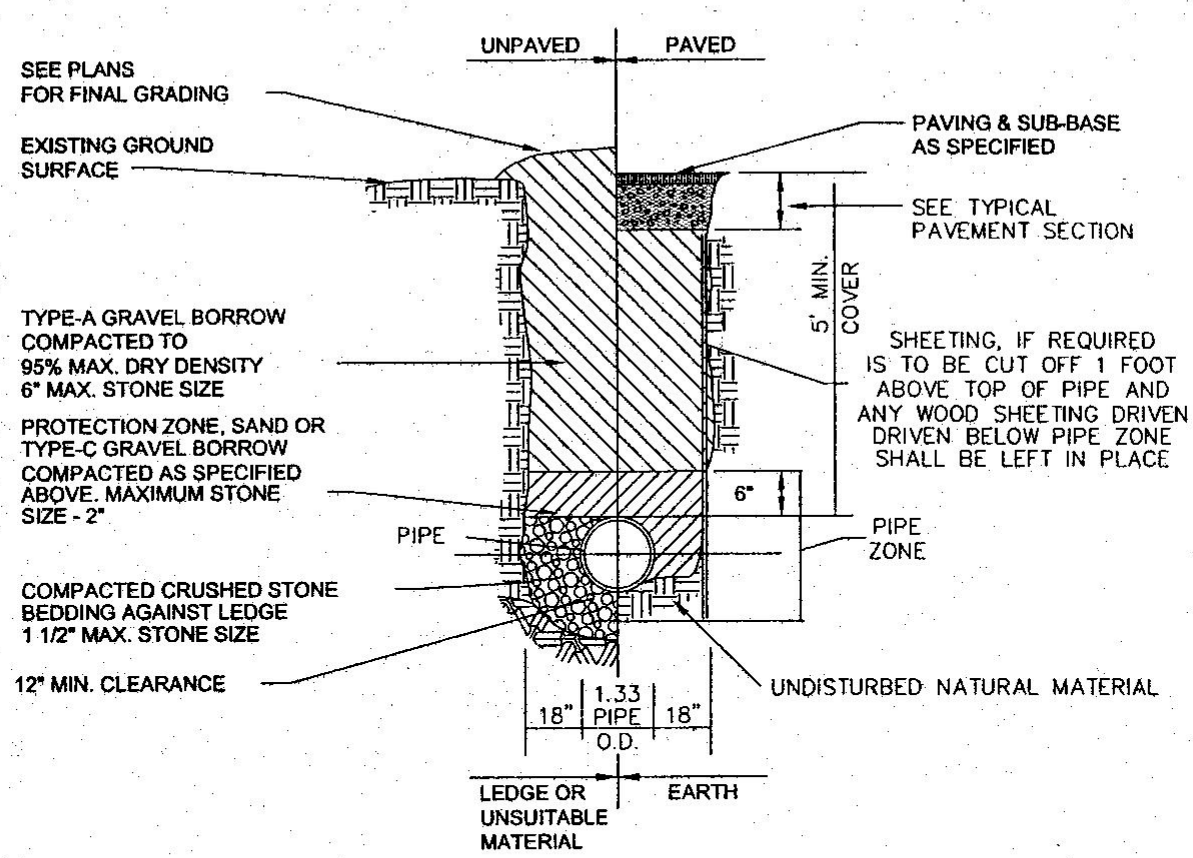

* SUITABILITY OF MATERIAL IS TO BE DETERMINED BY THE CITY OF NEWTON.

1. GRAVEL BORROW SHALL CONFORM TO MASS HIGHWAY SPECIFICATION M1.03.0
2. CRUSHED STONE BEDDING SHALL CONFORM TO MASS HIGHWAY SPECIFICATION M2.01.1

TYPICAL WATER TRENCH DETAIL

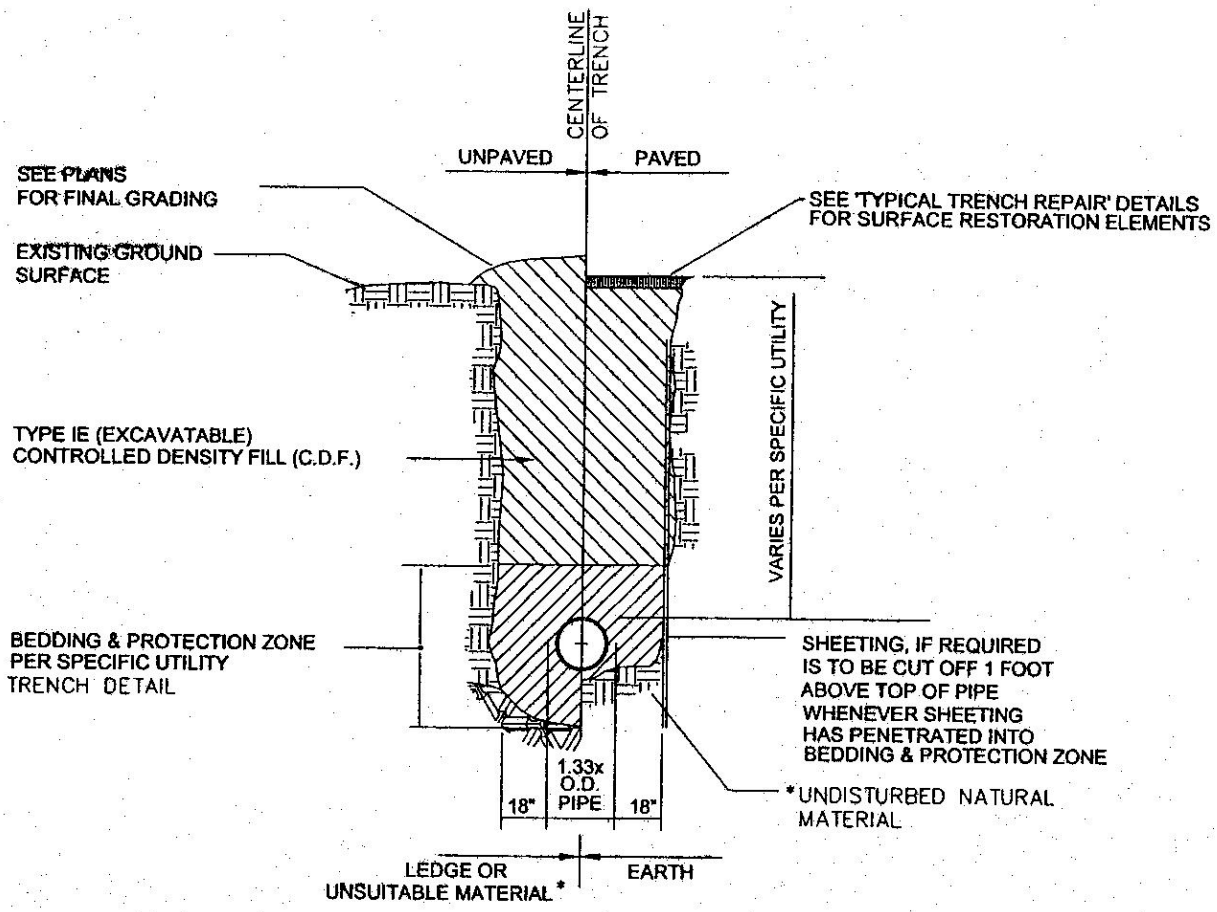

* SUITABILITY OF MATERIAL IS TO BE DETERMINED BY THE CITY OF NEWTON.

TYPICAL C.D.F. (CONTROLLED DENSITY FILL) TRENCH SECTION

CITY OF NEWTON

OCTOBER 20, 2000

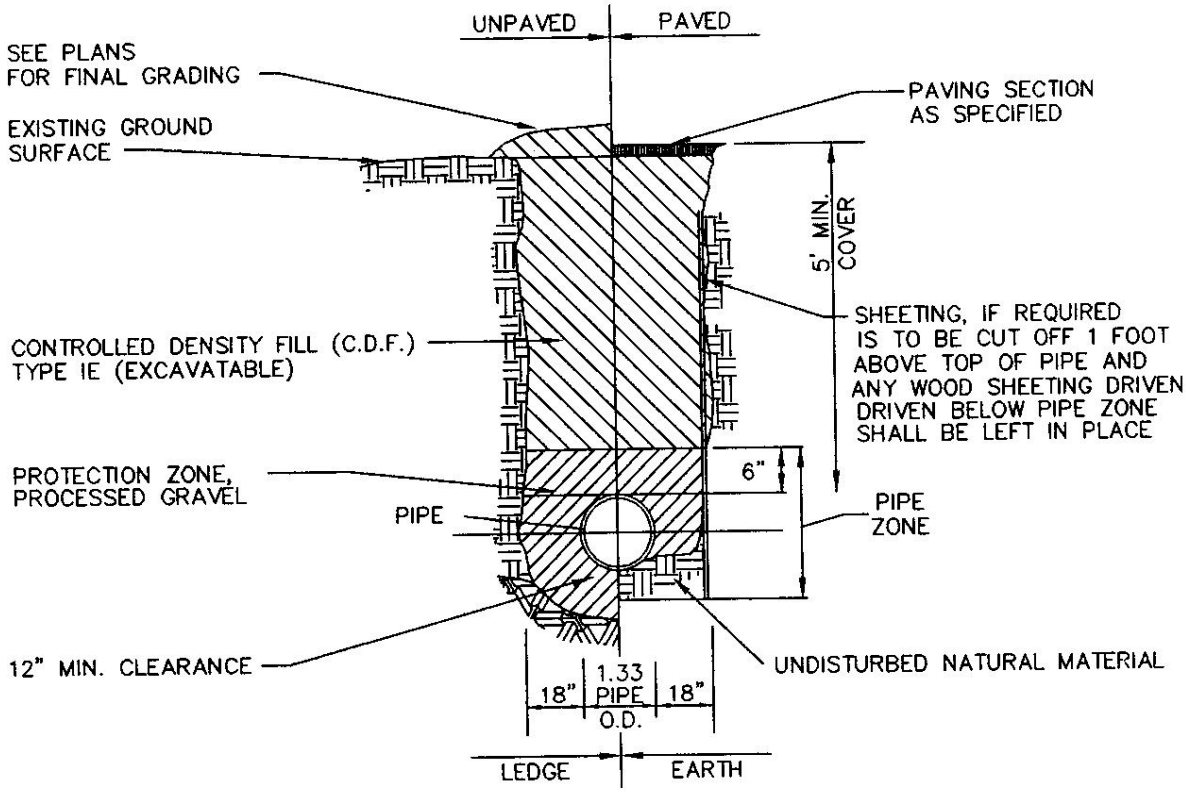

TYPICAL C.D.F. WATER TRENCH DETAIL

NOT TO SCALE

PROCESSED GRAVEL SHALL CONFORM TO
MASS HIGHWAY SPECIFICATION M2.01.7

NWTRCDF

TYPICAL TRENCH

ENCASEMENT

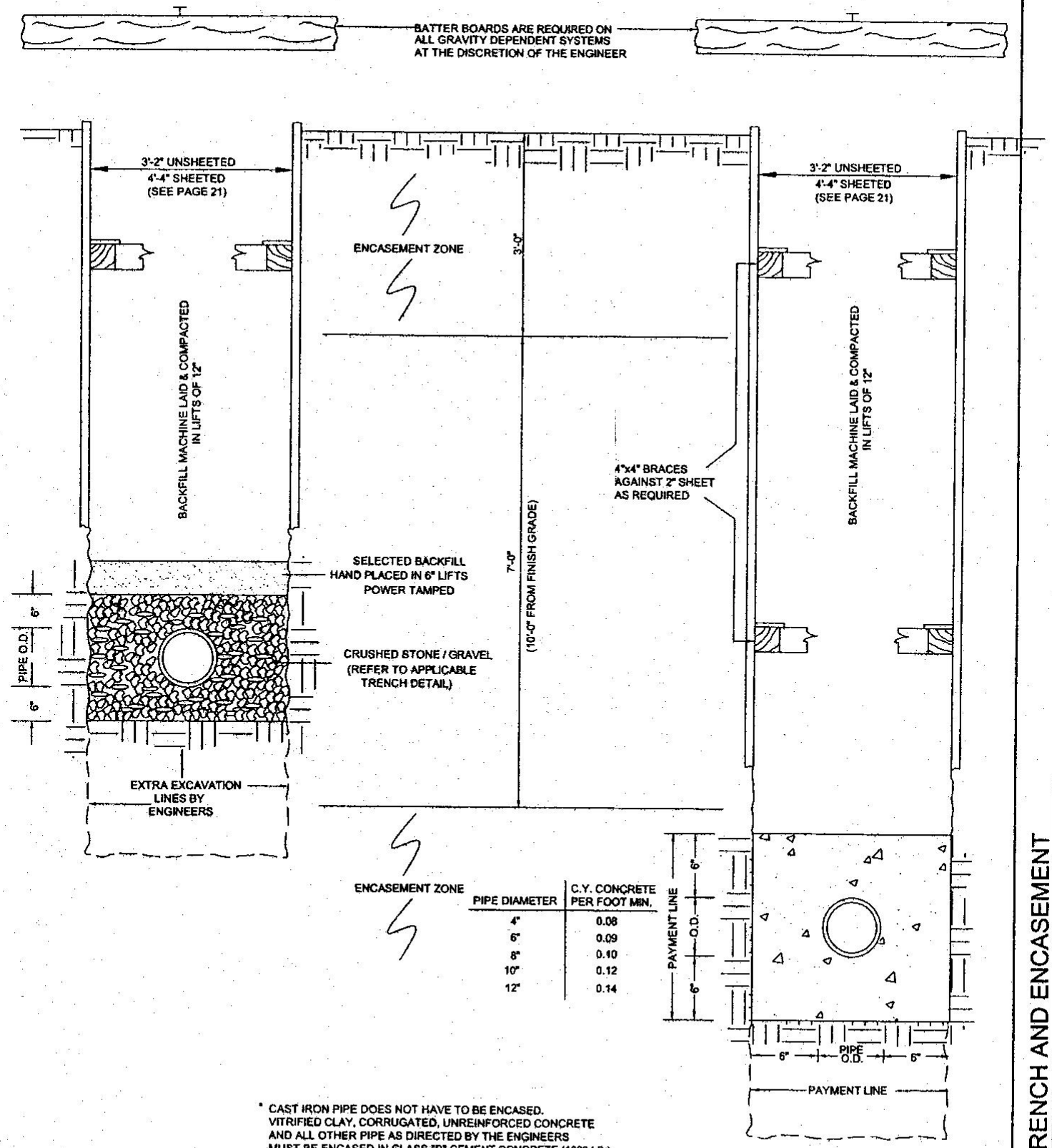

PIPE DIAMETER	C.Y. CONCRETE PER FOOT MIN.
4"	0.08
6"	0.09
8"	0.10
10"	0.12
12"	0.14

* CAST IRON PIPE DOES NOT HAVE TO BE ENCASED. VITRIFIED CLAY, CORRUGATED, UNREINFORCED CONCRETE AND ALL OTHER PIPE AS DIRECTED BY THE ENGINEERS MUST BE ENCASED IN CLASS "B" CEMENT CONCRETE (1000 LB.)

NOTE: ALL EXCAVATION (EXCEPT ROCK EXCAVATION) AND ALL BACKFILL (EXCEPT CRUSHED STONE) TO BELOW 6" OF PIPE INVERT IS TO BE INCLUDED IN THE FURNISHING, TRENCHING, AND LAYING ITEMS.

TYPICAL TRENCH AND ENCASEMENT

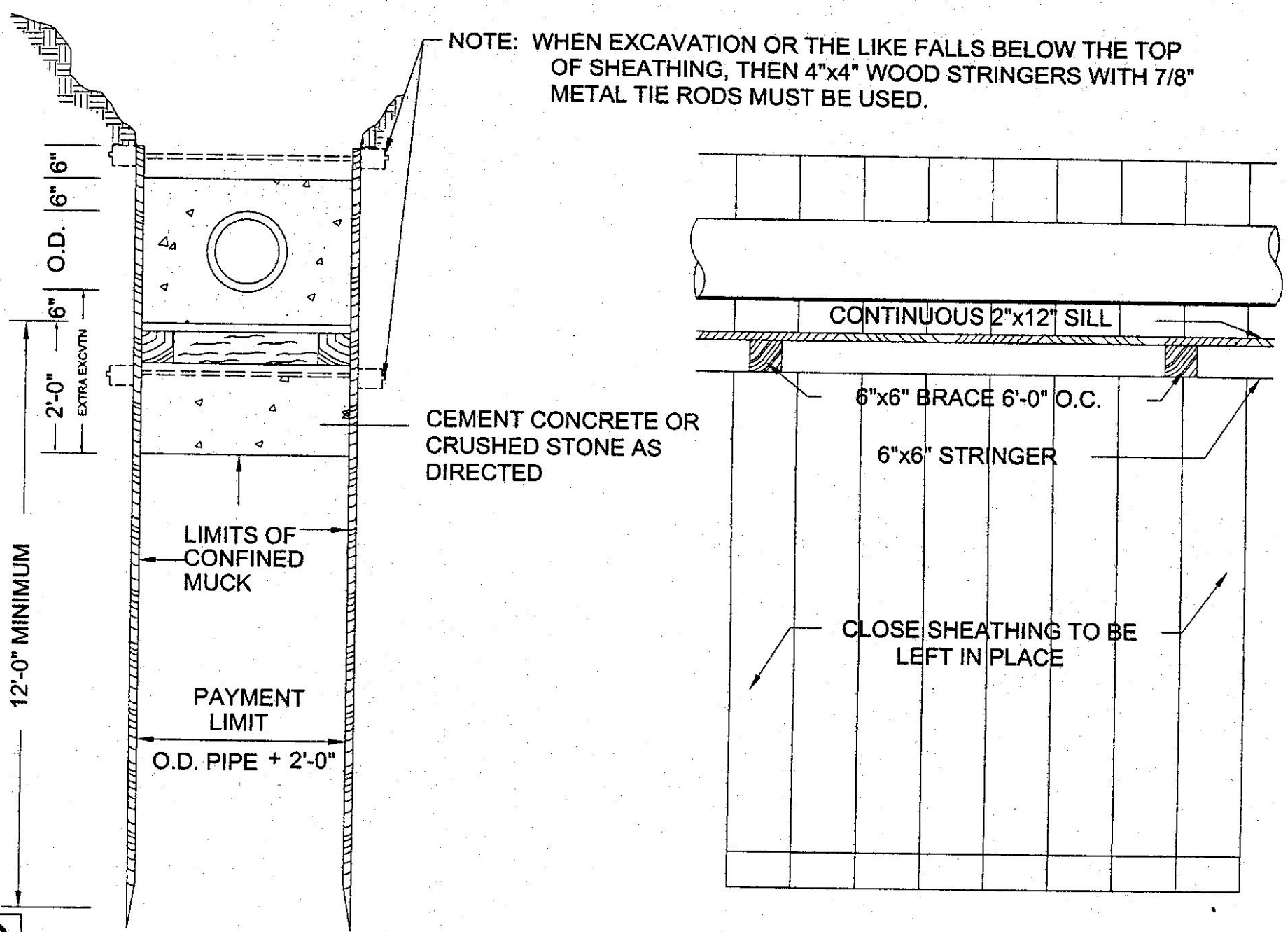

21

TRENCH SECTION UTILIZING TIMBER PLATFORM

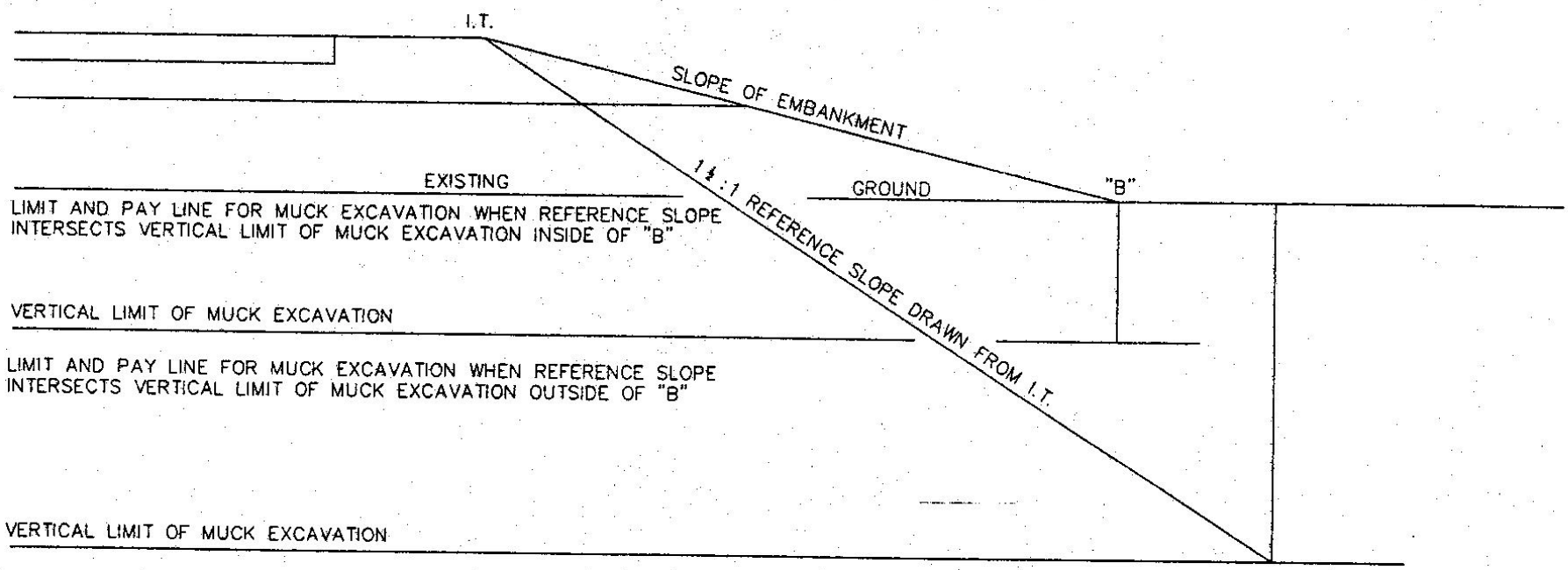

NOTES:

1. "B"– INTERSECTION OF EXISTING GROUND AND SLOPE OF EMBANKMENT
2. THE ABOVE METHOD MAY ALSO BE USED TO DETERMINE THE LIMIT FOR EXCAVATION OF OTHER UNSUITABLE MATERIALS (EXCLUDING LEDGE).

22

PAYMENT LIMITS FOR MUCK EXCAVATION

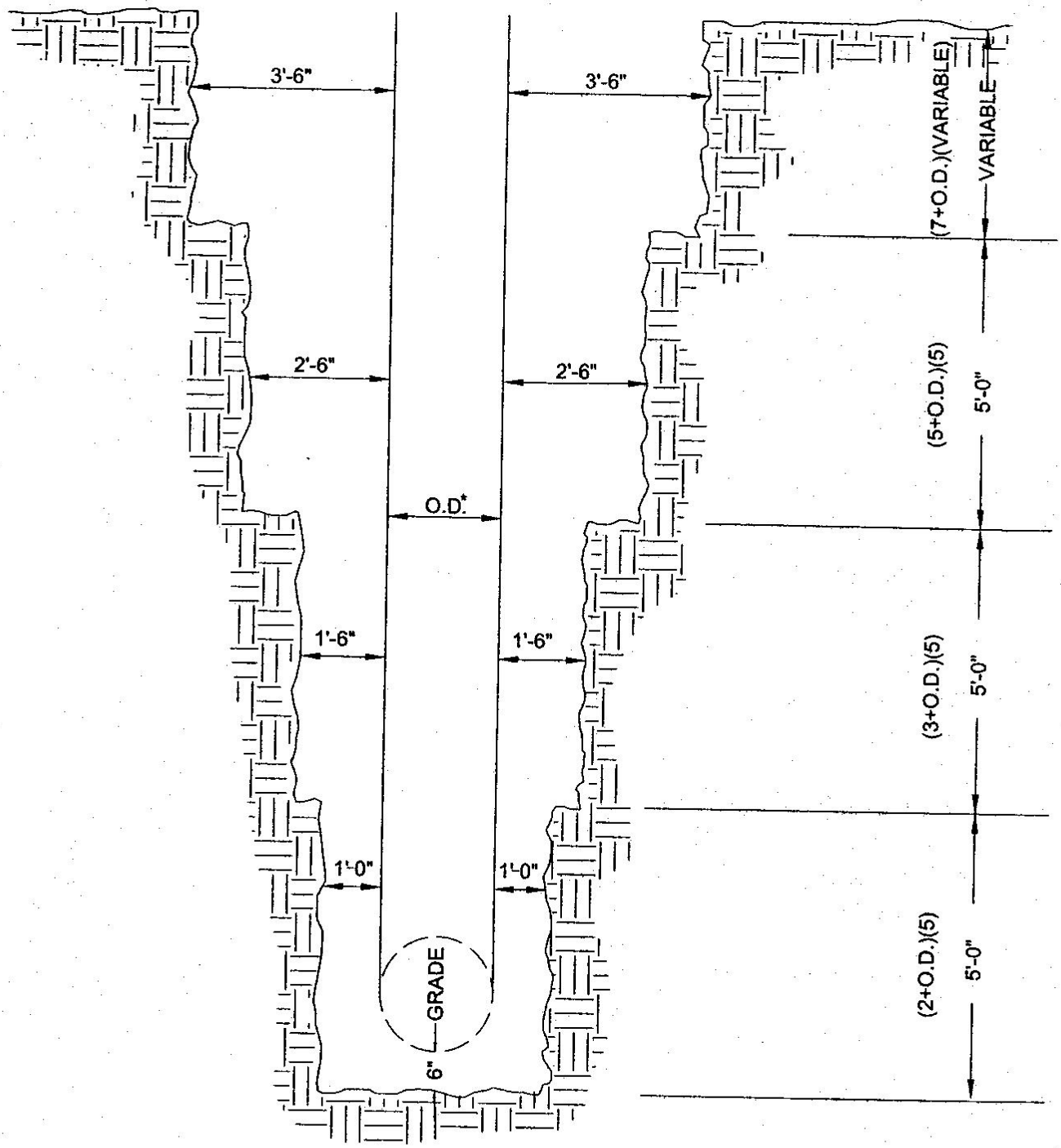

* OUTSIDE DIAMETER OF INSTALLED PIPE

PAYMENT LINES FOR ROCK EXCAVATION IN TRENCHES

TOP VIEW

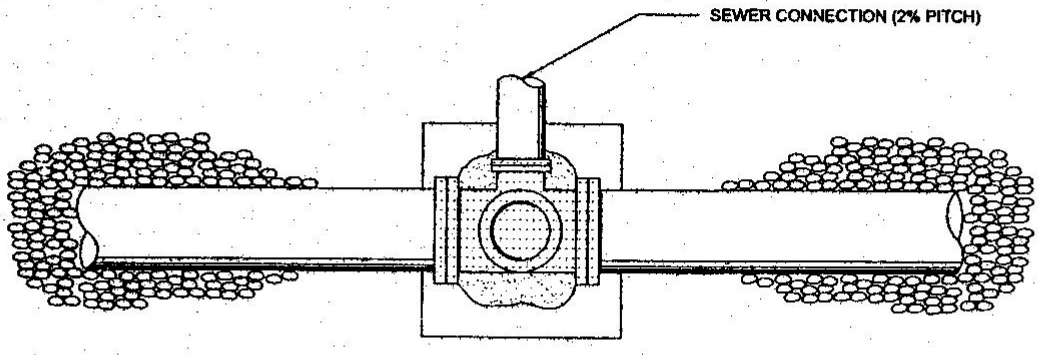

NOTE: ANY PVC PIPE WITH LESS THAN 30" OF COVER MUST BE ENCASED. (PG. 20)

PAGE 34 APPLIES

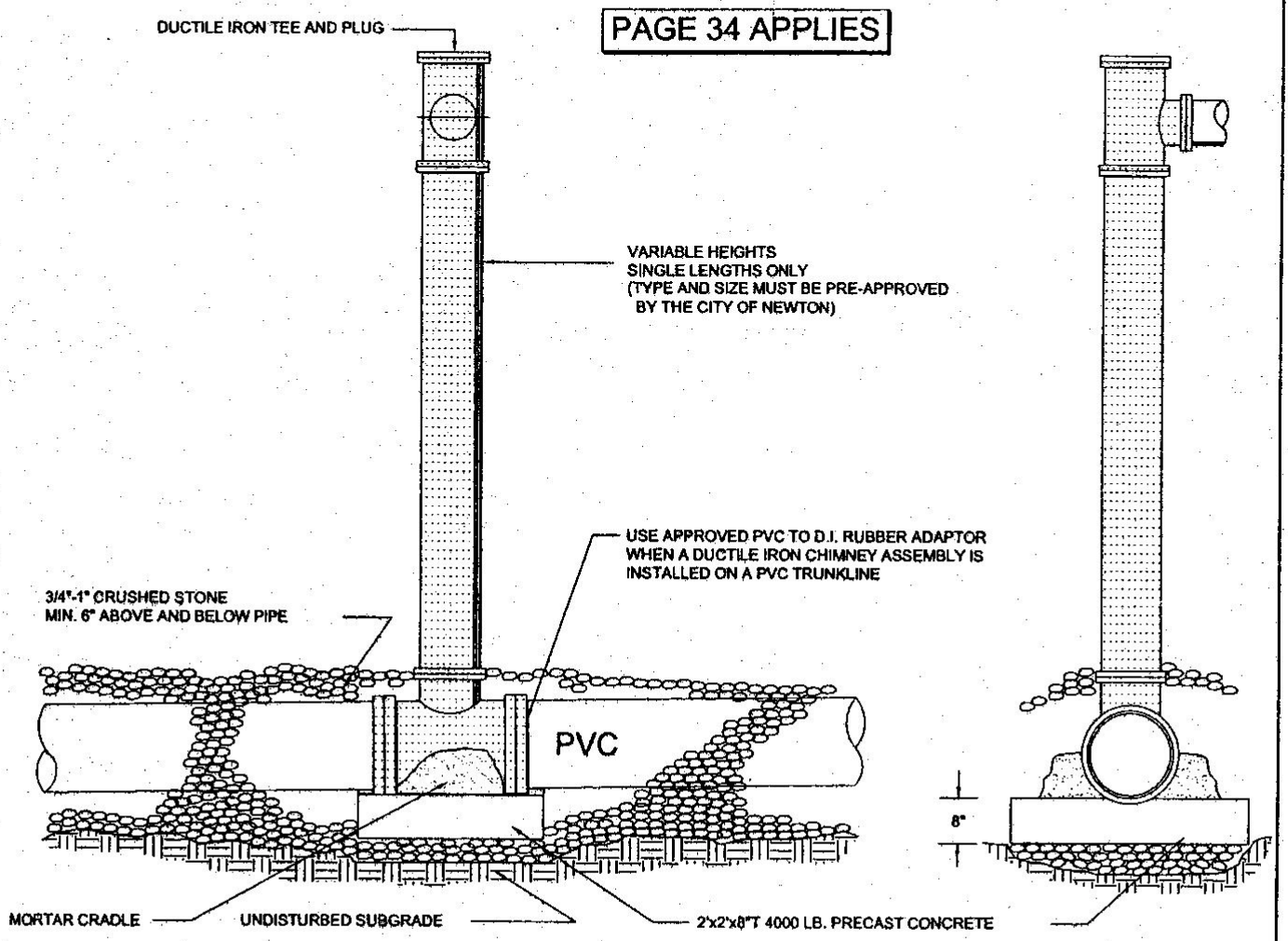

SEWER CHIMNEY (DUCTILE IRON)

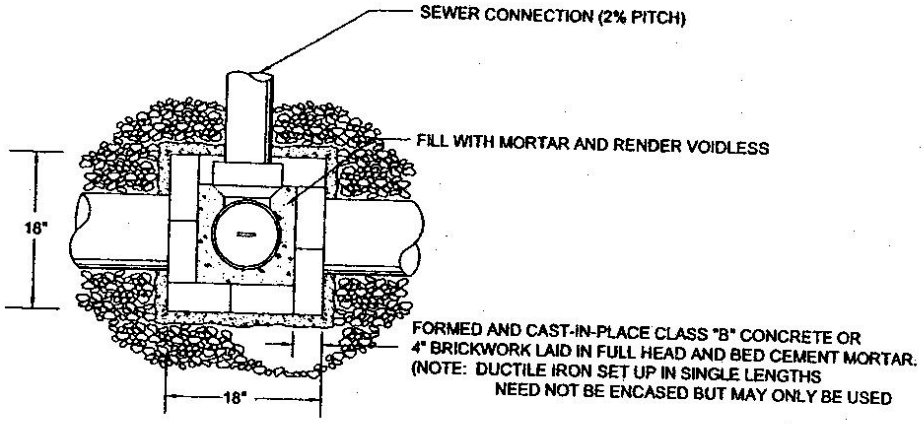

TOP VIEW

PAGE 34 APPLIES

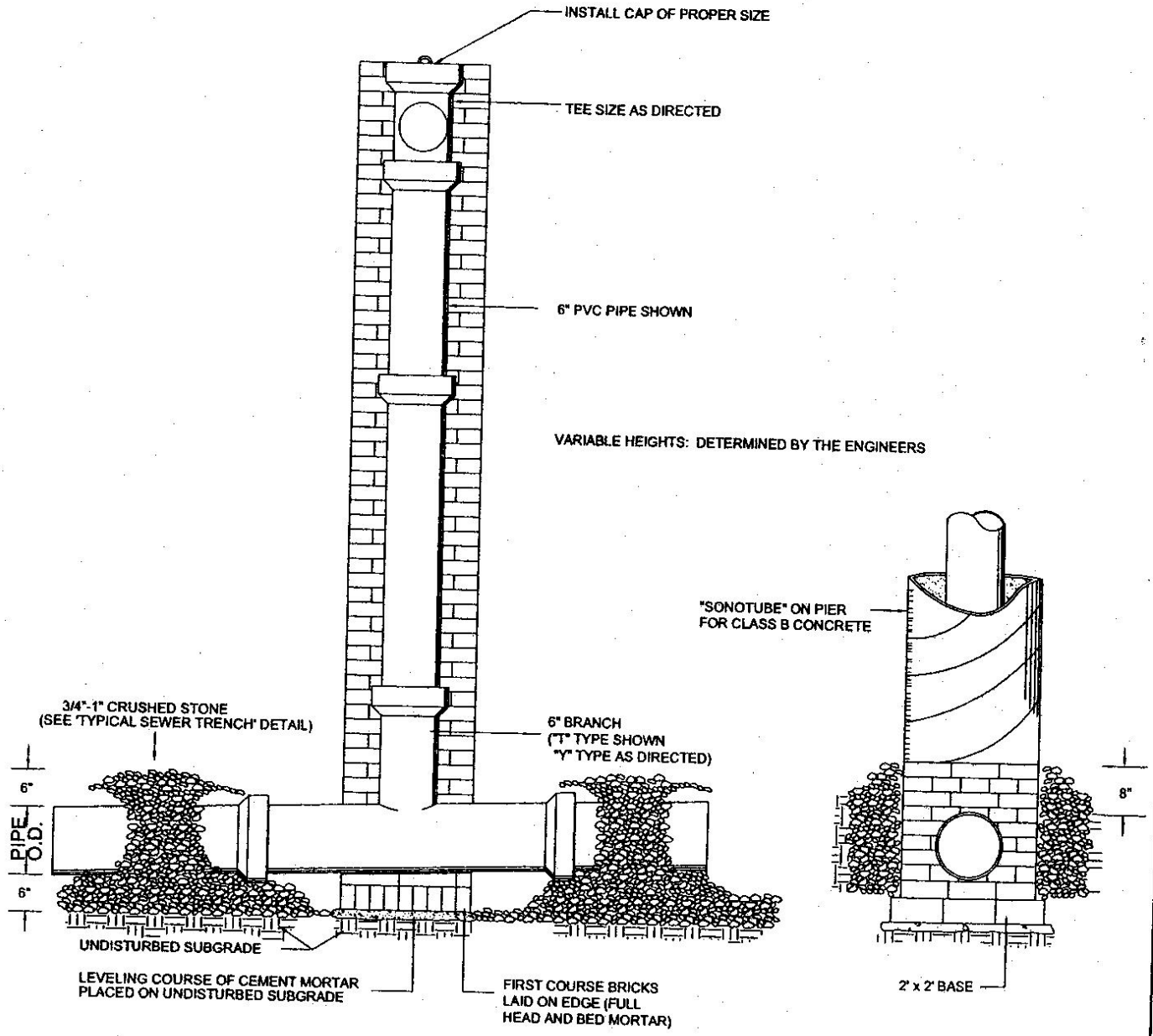

ELEVATION VIEW

SEWER CHIMNEY (PVC)

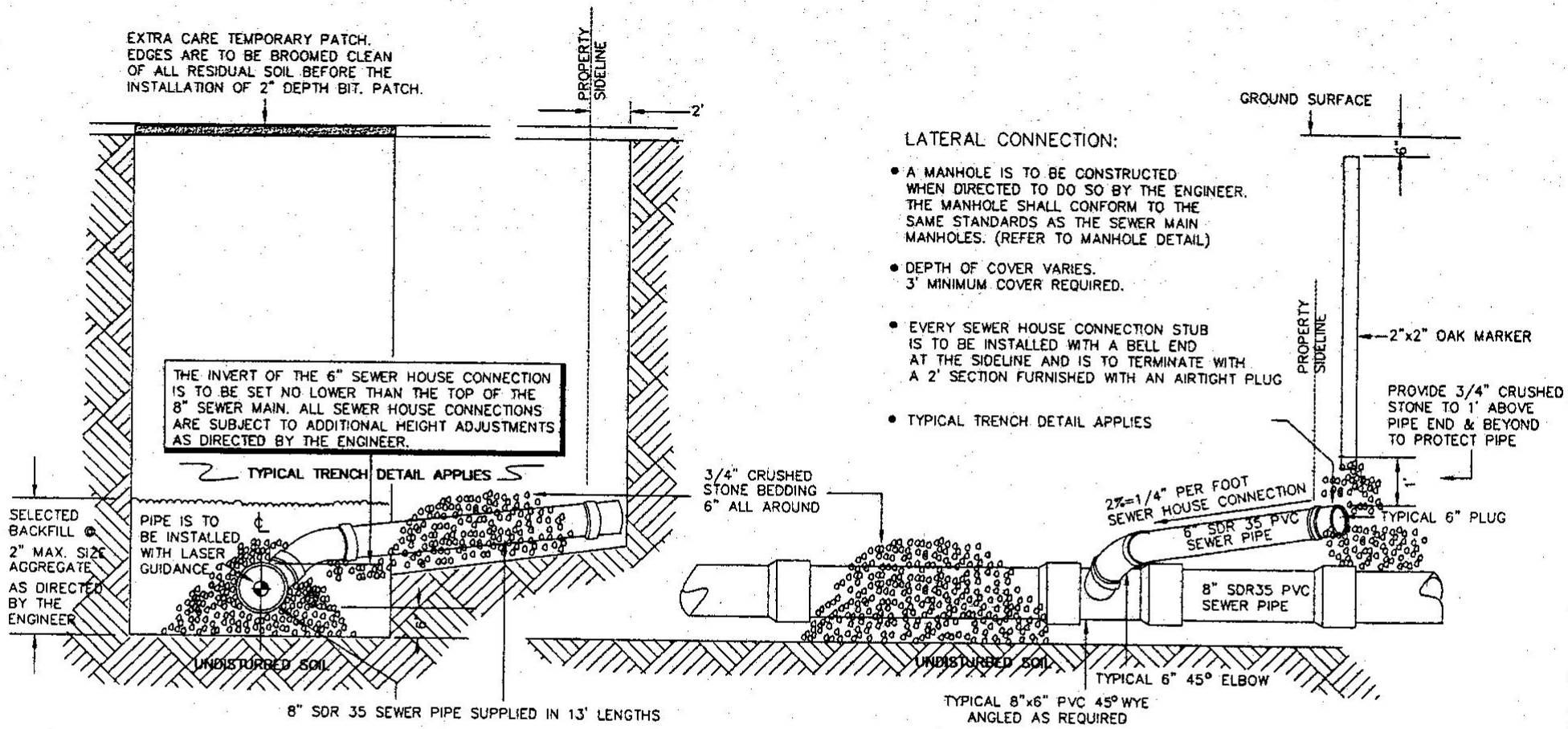

26

TYPICAL PVC SEWER HOUSE CONNECTION

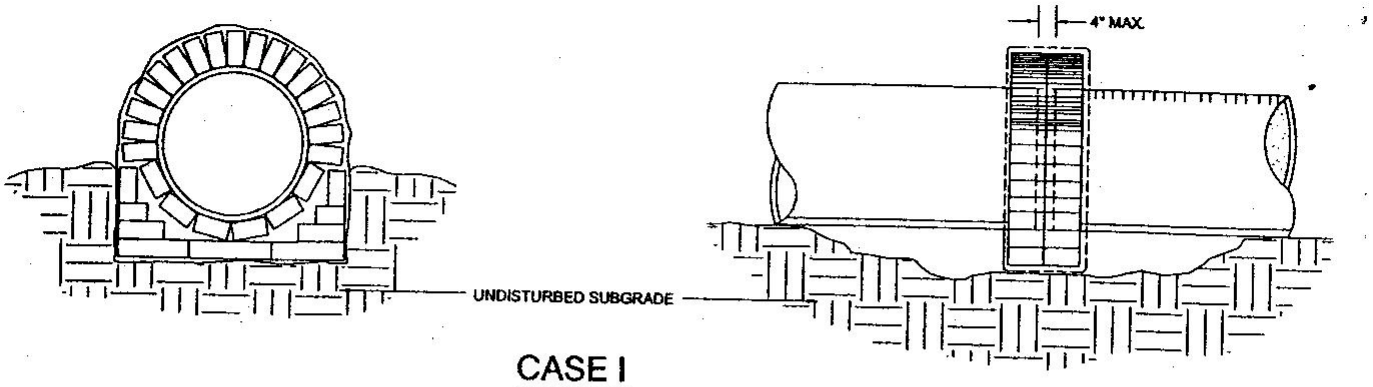

CASE I
(FULL COLLAR)

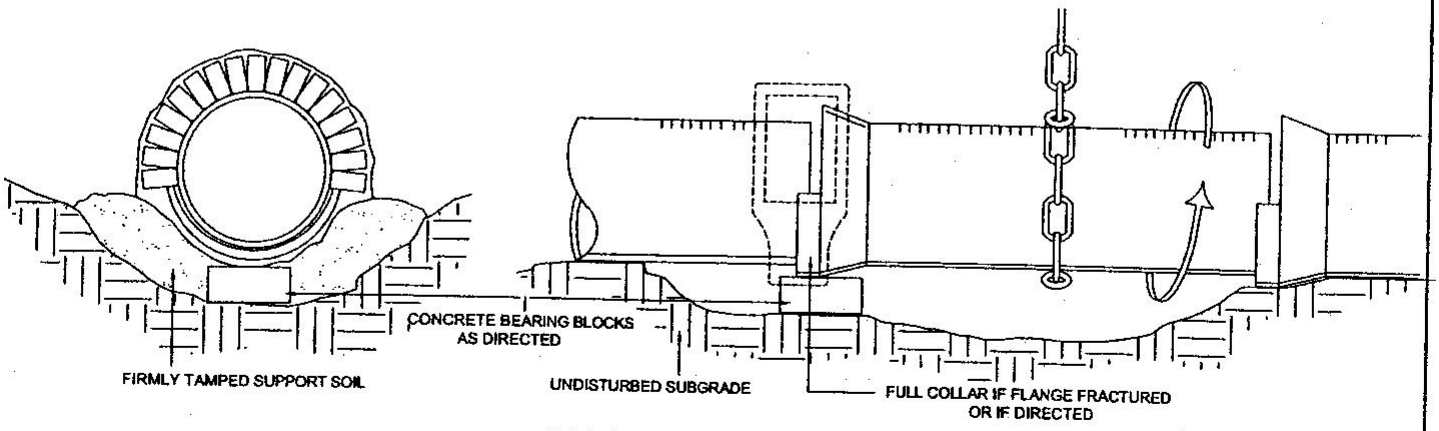

CASE II
(PIPE LET-IN BY "SPINNING")

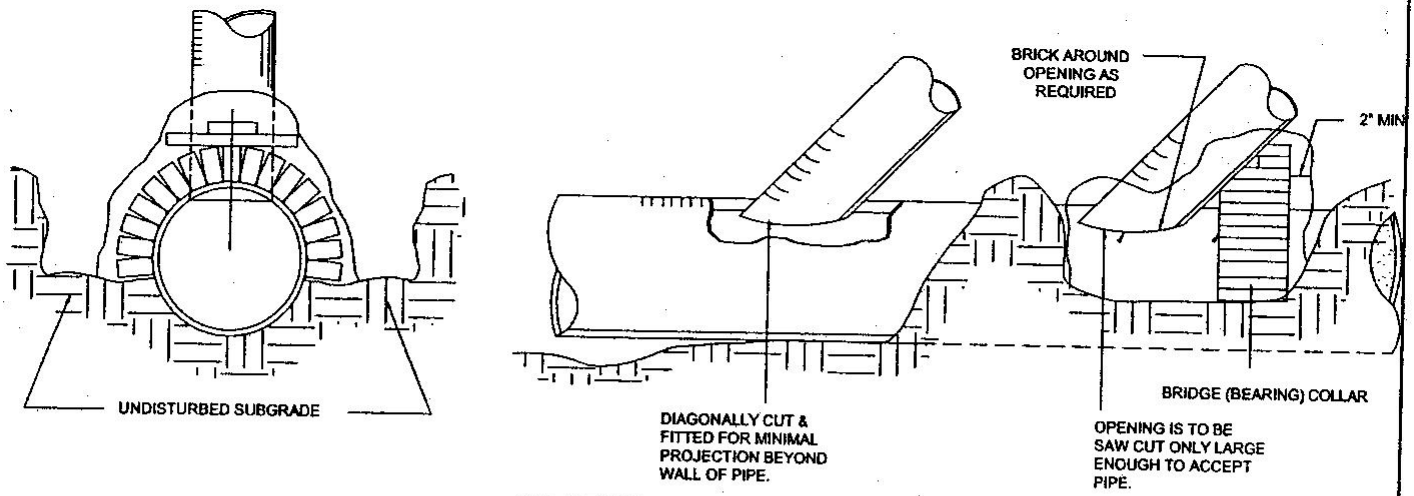

CASE III
(PIPE LET-IN)
TOP TAP SHOWN

NOTES: BEFORE THE BASE BRICKS ARE PLACED, A LAYER OF CEMENT MORTAR IS TO BE PLACED ON THE UNDISRTURBED SUBGRADE (ALL LOOSE MATERIAL REMOVED).

ALL BRICK IS TO BE RED CLAY SEWER BRICK AND SET IN CEMENT MORTAR.

ALL BRICK IS TO BE PARGED WITH A MINIMUM 2" THICK CEMENT MORTAR.

* APPLICABLE FOR DRAIN CONNECTIONS ONLY AND ONLY WHEN SPECIFIED. FOR SEWER CONNECTIONS REFER TO PAGES 24, 25 & 26.

TYPICAL CASES SHOWN ARE MINIMUM REQUIREMENTS STRUCTURAL CONSIDERATIONS BASED ON FIELD CONDITIONS MAY REQUIRE A COMBINATION OF CASES AS DIRECTED BY THE ENGINEER.

TYPICAL PIPE/PIPE RETROFIT DRAIN CONNECTIONS

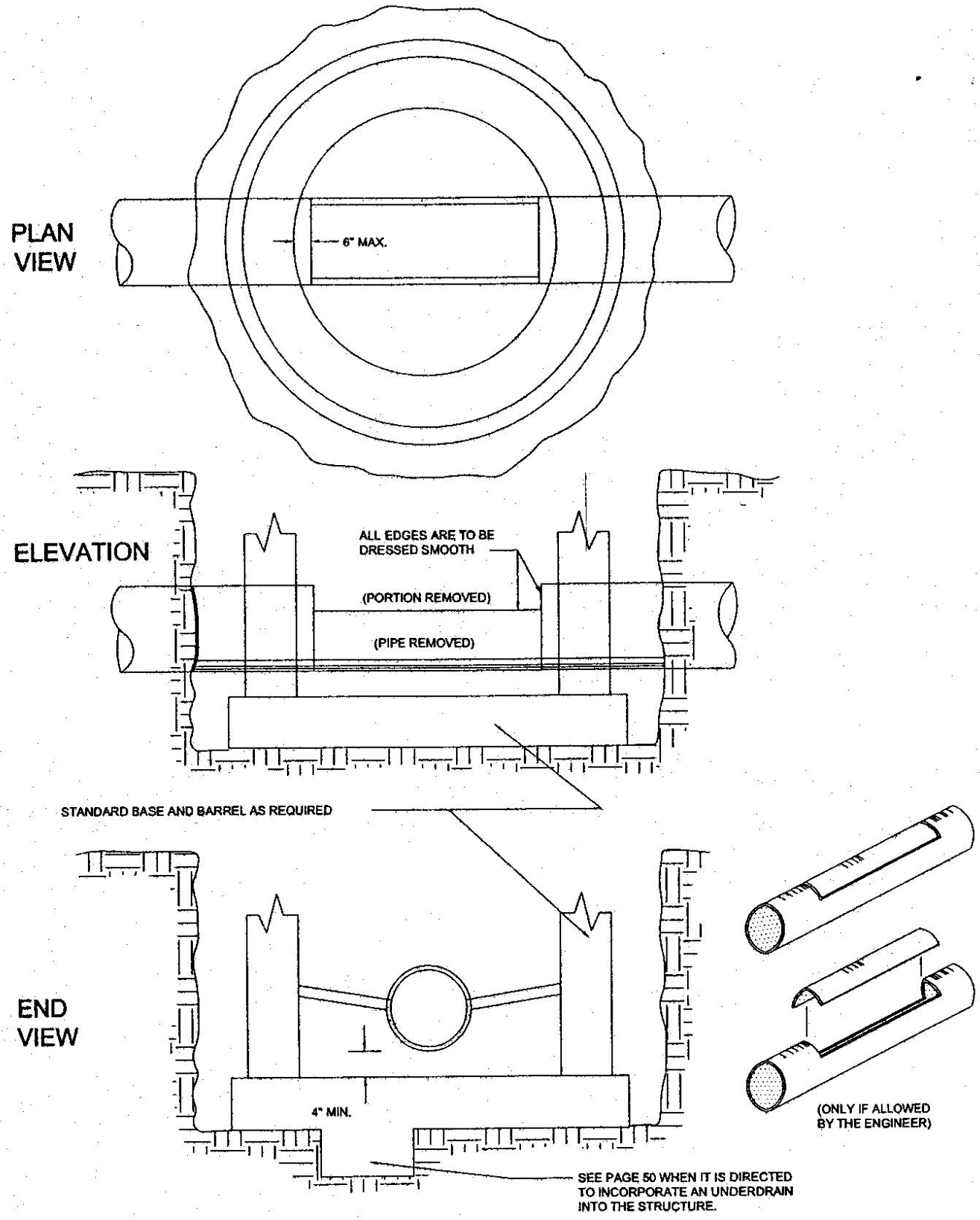

PAGE 34 APPLIES

KERF & CUT PIPE: ONLY A POWER CUT-OFF SAW AND BLADE MAY BE USED TO SEPARATE PORTIONS OF PIPE.

THIS METHOD OF BUILDING A MANHOLE OVER AN EXISTING PIPE WILL ONLY BE ALLOWED WHEN CONDITIONS WARRANT, THEN ONLY WHEN DIRECTED BY THE ENGINEER. IT IS NOT TO BE CONSIDERED WHEN PLACING A BID.

WHEN PLACING A BID WHERE A MANHOLE IS TO BE BUILT OVER AN EXISTING PIPE IT IS TO BE ASSUMED THE SECTION(S) OF PIPE WILL BE REMOVED AND A STANDARD STRUCTURE WILL THEN BE BUILT.

INVERT AND BASE FOR RETROFIT MANHOLES

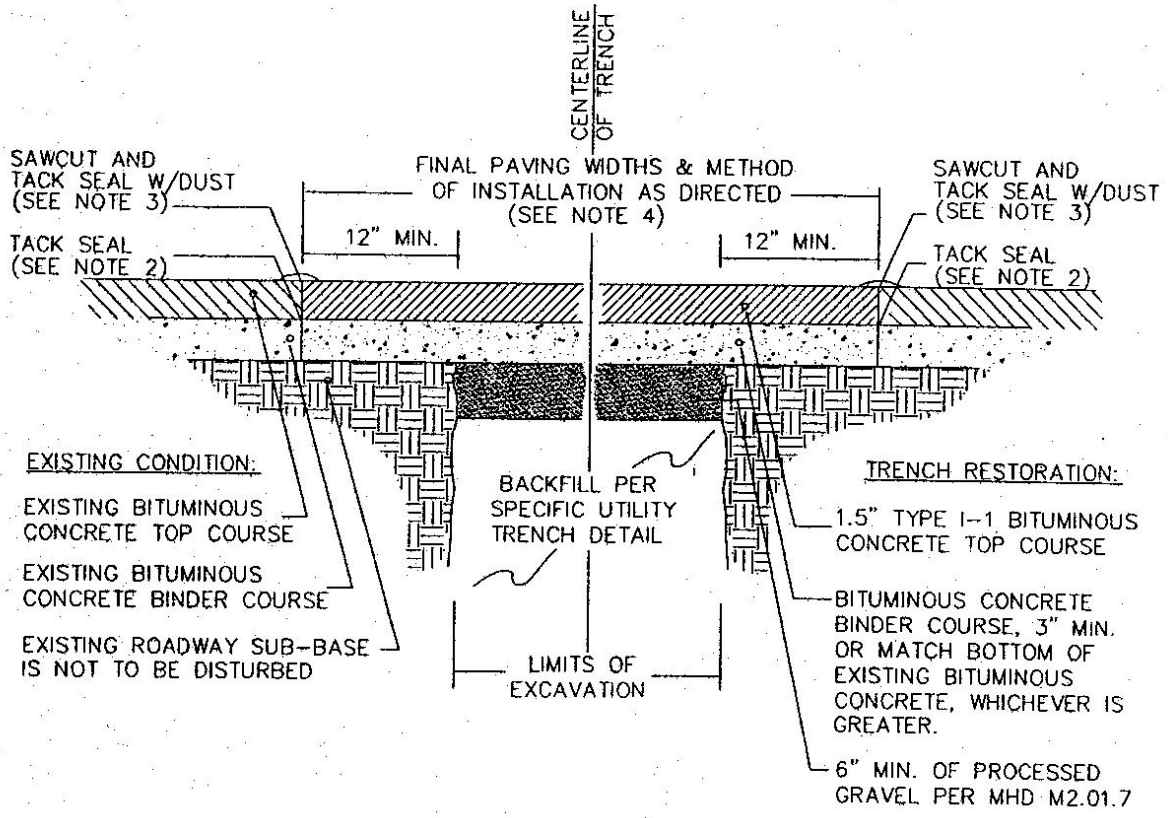

1. ALL INSTALLATION AND MATERIAL SPECIFICATIONS PER MASS. HIGHWAY DEPARTMENT STANDARD SPECIFICATIONS FOR HIGHWAYS AND BRIDGES, 1988 AS AMENDED.
2. ALL EXPOSED BITUMINOUS CONCRETE IS TO BE TACKED PER MHD PRIOR TO NEW BITUMINOUS CONCRETE INSTALLATION.
3. ALL EXPOSED JOINTS ARE TO BE SEALED WITH TACK AND STONE DUST.
4. ANY TOP COURSE APPLIED AT A WIDTH OF 6' WIDE OR GREATER IS TO BE PLACED BY MACHINE/BOX SPREADER WHEN & AS DIRECTED BY THE CITY OF NEWTON.

TYPICAL TRENCH REPAIR & PAVEMENT SECTION DETAIL (1/2)

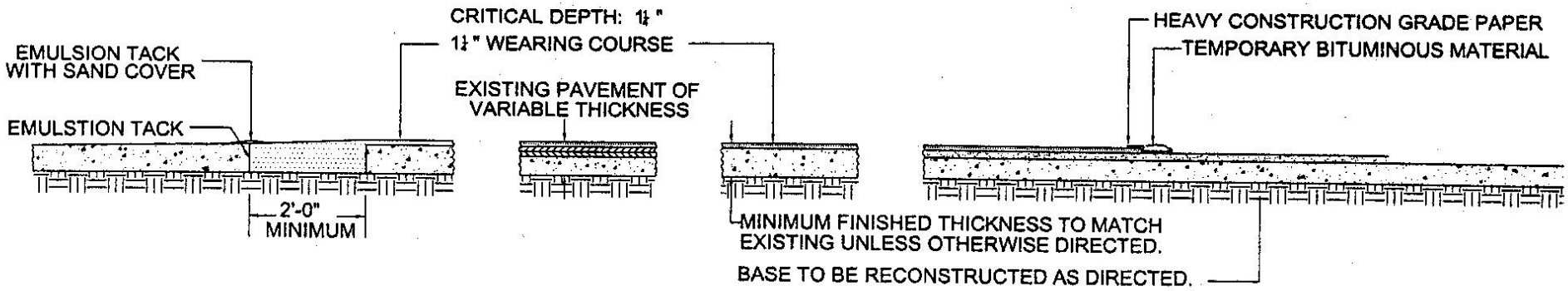

EXTENSIVE HANDLAYING OF WEARING COURSE WILL NOT BE ALLOWED ON PATCHES WHICH AVERAGE MORE THAN 6' IN WIDTH.

SIDE VIEWS

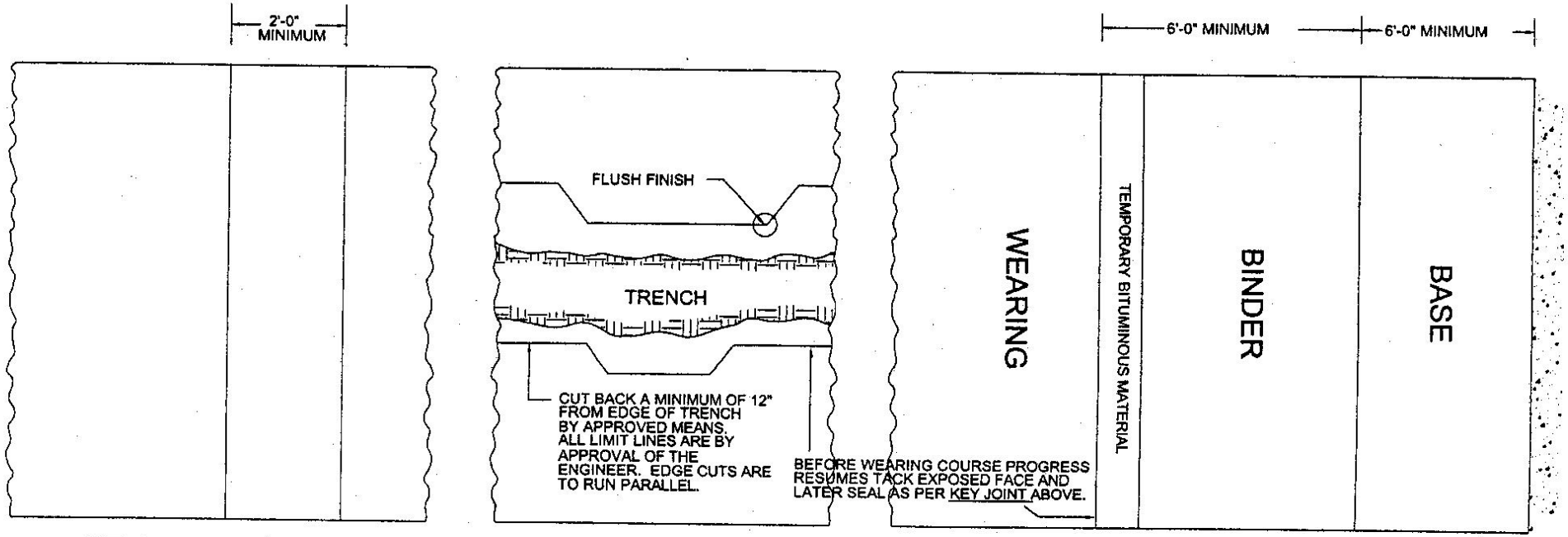

KEY JOINT SECT. PERMANENT PATCH SECT. TEMPORARY PAPER JOINT SECT.

PLAN VIEWS

30

TYPICAL TRENCH REPAIR & PAVEMENT SECTION DETAIL (2/2)

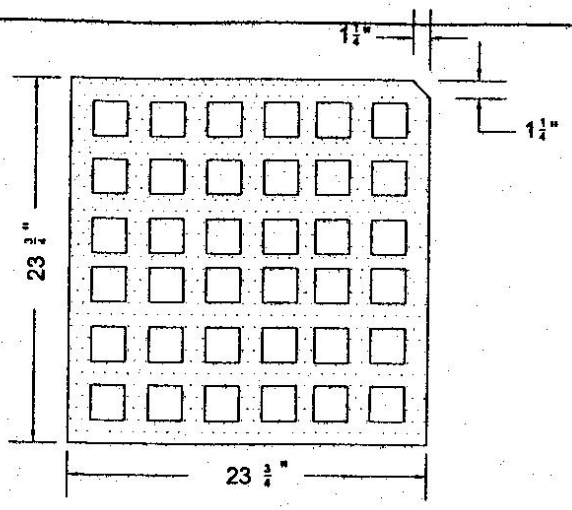

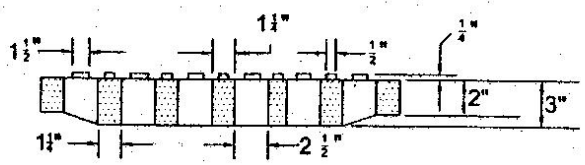

AUXILIARY FLANGE WHEN NO CURB IS PRESENT

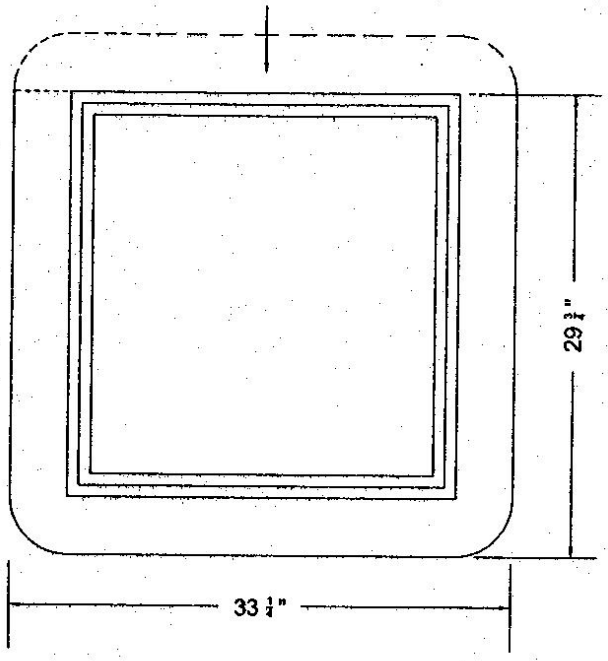

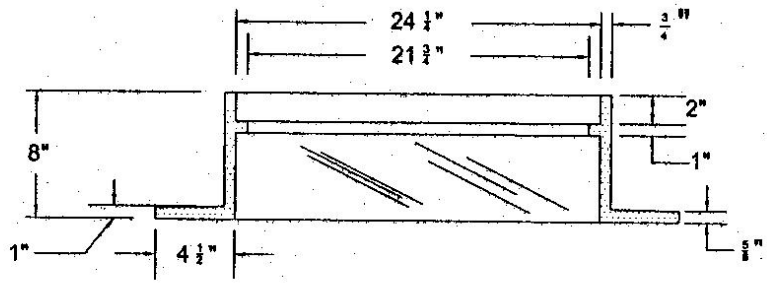

NOTE: MINIMUM WEIGHT OF GRATE AND FRAME - 480 lbs.

SINGLE CATCHBASIN GRATE AND FRAME

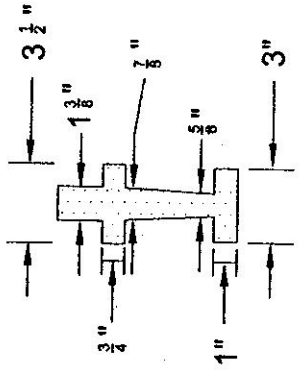

SECTION B-B

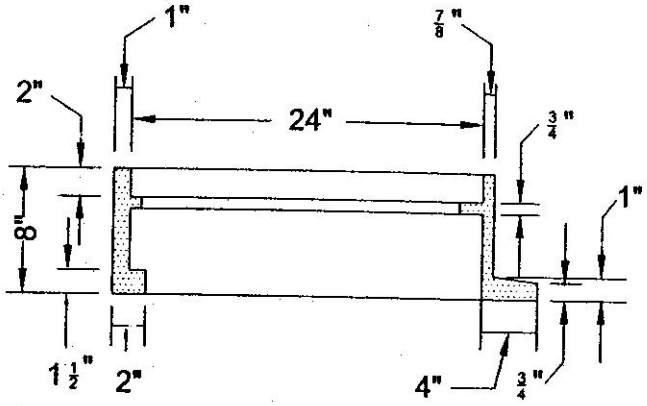

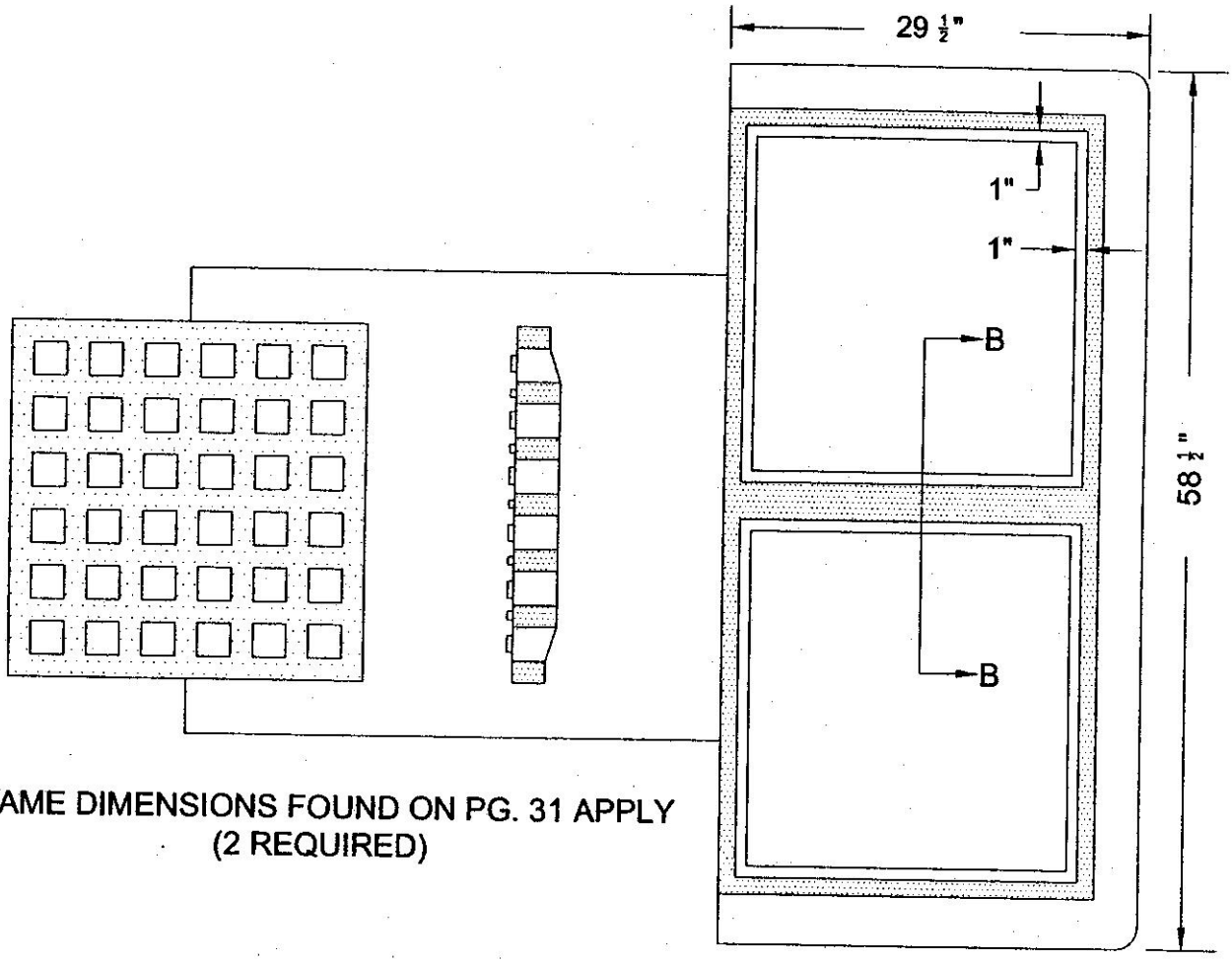

FRAME DIMENSIONS FOUND ON PG. 31 APPLY
(2 REQUIRED)

MINIMUM WEIGHT OF GRATES AND FRAME-900 lbs.

DOUBLE CATCHBASIN GRATE AND FRAMES

TOP

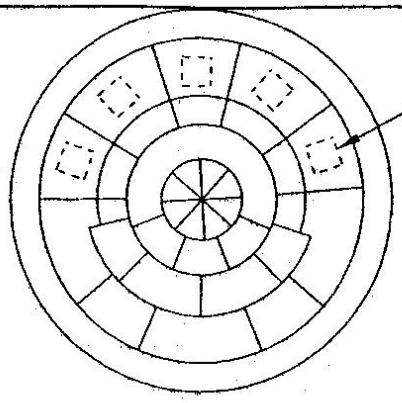

NOTE: TO BE CAST IN PLACE
D-R-A-I-N
S-E-W-E-R
W-A-T-E-R

COVERS ARE TO BE SUPPLIED WITHOUT HOLES

BOTTOM

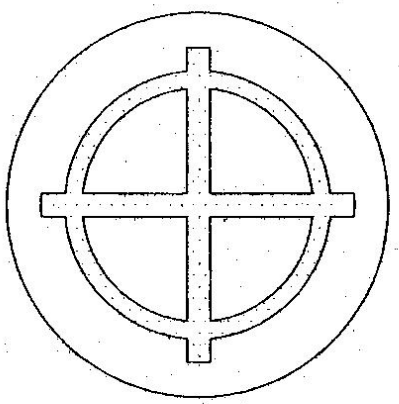

MINIMUM WEIGHT OF COVER: 230 lbs.

SIDE

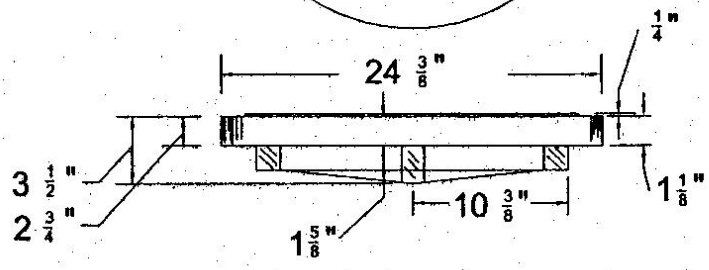

CASTINGS ARE TO BE BY LEBARON FOUNDRY MECHANICS FOUNDRY OR APPROVED EQUAL

TOP

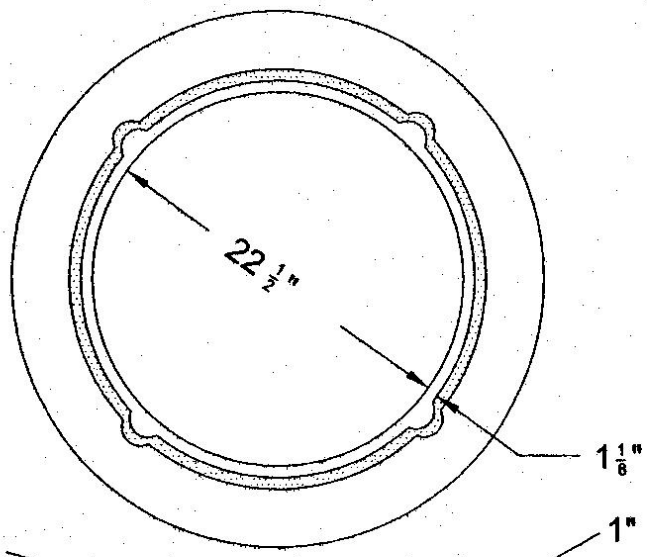

SIDE

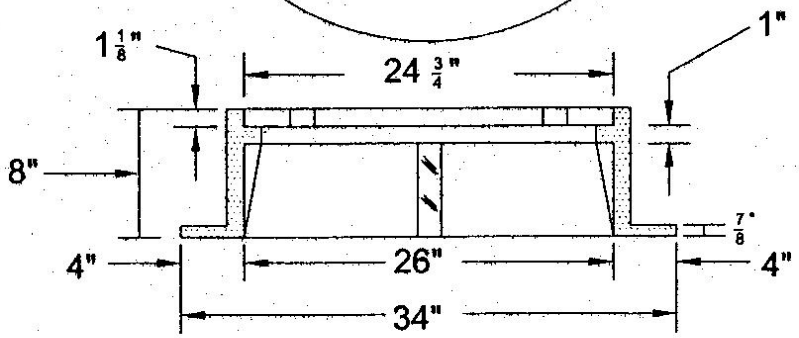

MINIMUM WEIGHT OF FRAME: 250 lbs.

MANHOLE FRAMES AND COVERS

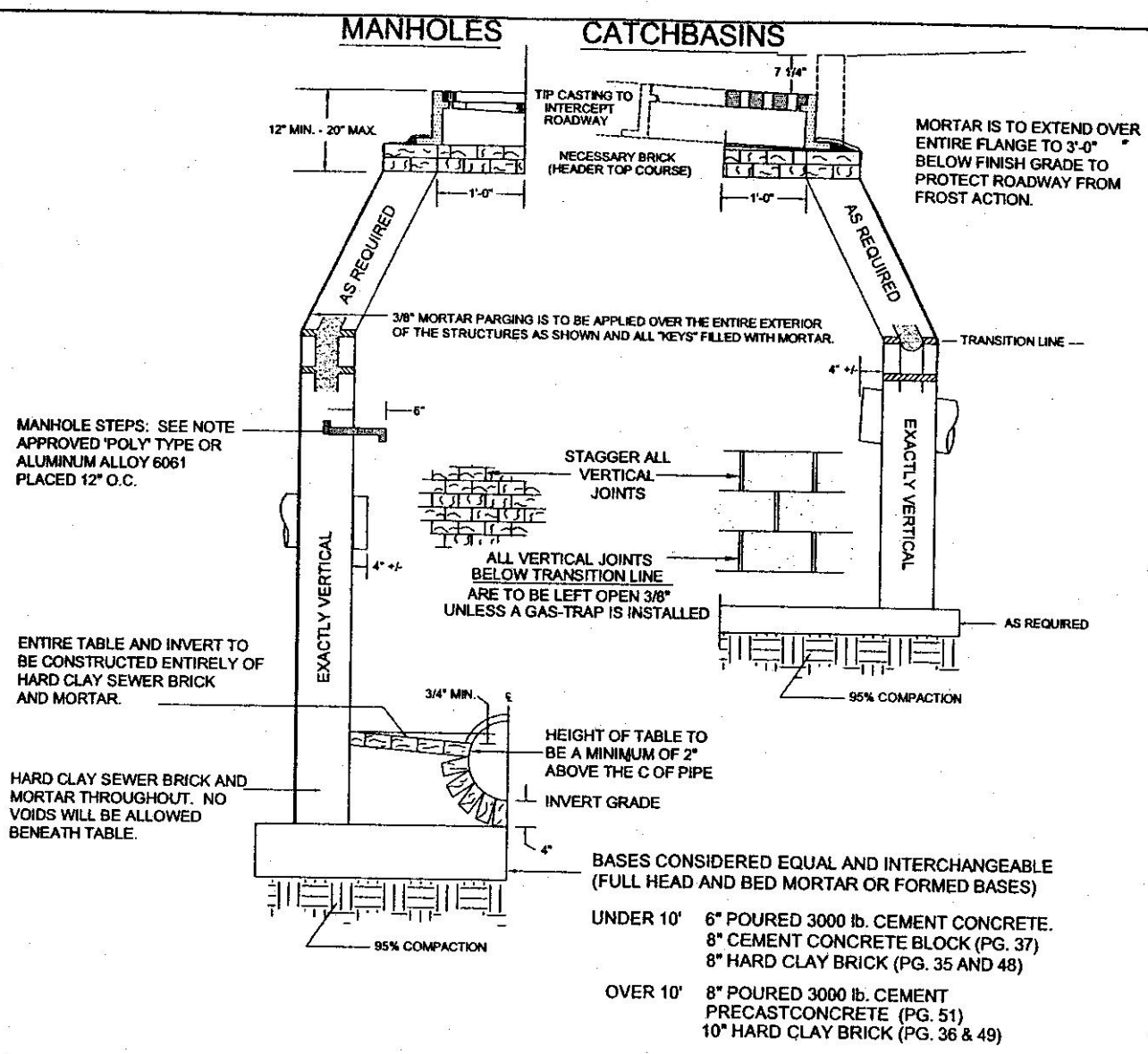

MORTAR: ALL MORTAR TO BE ONE PART CEMENT TO TWO PARTS CLEAN WASHED SAND BY VOLUME.

BLOCK: ALL BLOCK IS TO BE SOLID PRECAST CEMENT CONCRETE.

BRICK: ALL BRICK IS TO BE COILED HARD CLAY TYPE M SEWER BRICK.

MANHOLE STEPS:

ALL MANHOLE STEPS TO BE PLACED WITHIN THE STRUCTURE VERTICALLY ABOVE ONE ANOTHER AND PLACED SO AS NOT TO BE INTERFERED WITH BY MANHOLE STRUCTURAL COMPONENTS OR INFLUENTS. STEPS TO EXTEND INTO CONE SECTION.

COMPACTION AROUND FRAMES:

AFTER THE FRAME HAS BEEN SET BOTH THE BACKFILL MATERIAL AND THE SUBSEQUENT BITUMINOUS BINDER ARE TO BE INDEPENDENTLY COMPACTED WITH AN APPROVED PNEUMATIC "HAMMER" AND TAMPING BIT.

ALL STRUCTURES ARE TO BE BUILT AS SHOWN UNLESS A MODIFICATION IS NECESSARY TO MEET EXISTING FIELD CONDITIONS. NO ADJUSTMENT IN THE BID PRICE WILL BE MADE.

FOR INFORMATION REGARDING SPECIFIC TYPES OF STRUCTURES, REFER TO DRAWING FOUND ELSEWHERE IN THESE DETAILS.

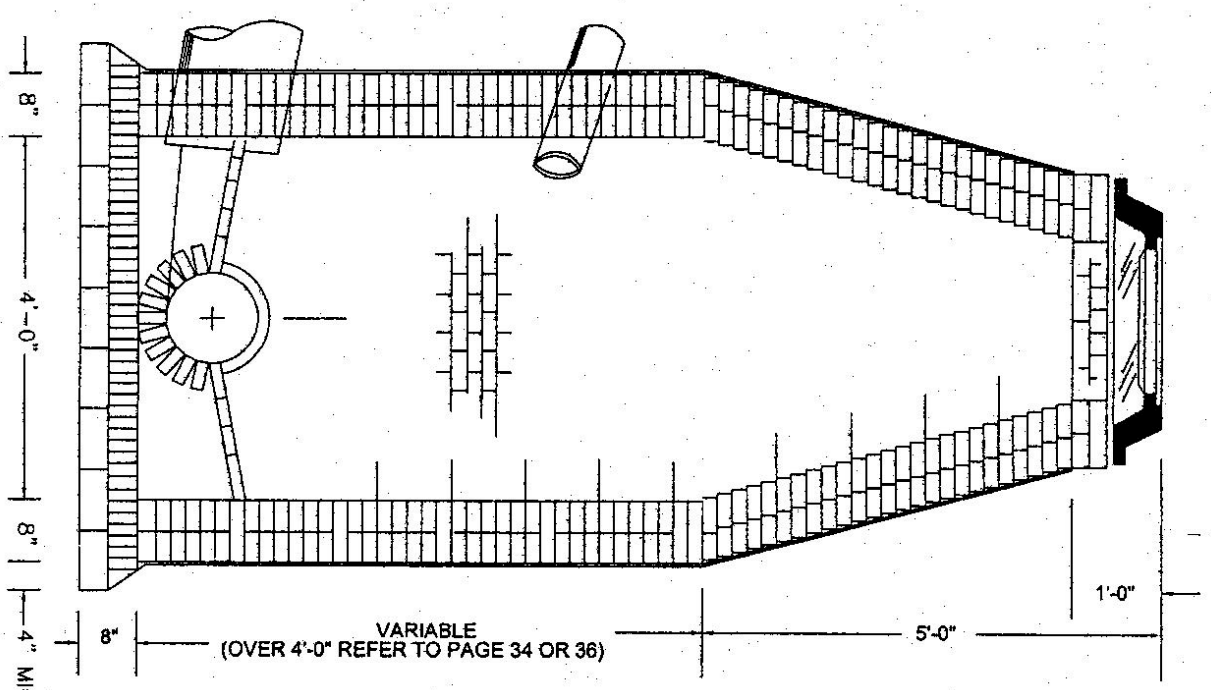

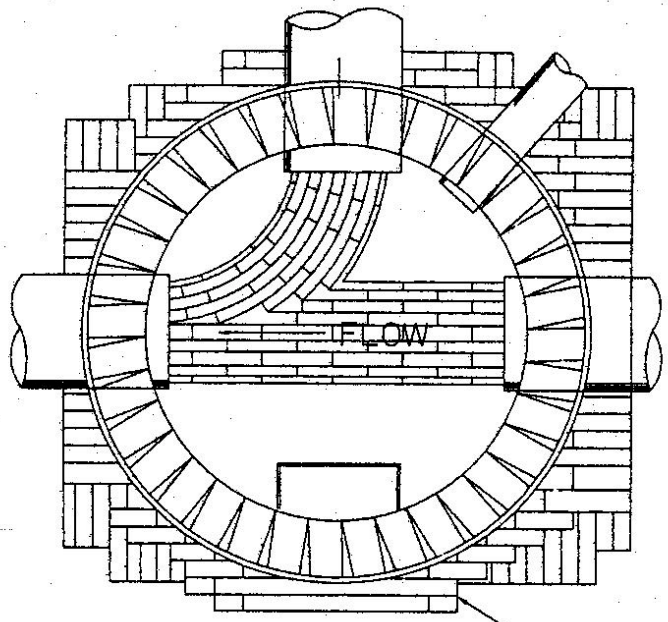

BASE BRICKS LAID ON EDGE
TOP COURSE PERPENDICULAR
TO BOTTOM COURSE
STAGGER ALL JOINTS
SIDE TO SIDE AND
TOP TO BOTTOM.

HEADER COURSE EVERY SEVENTH COURSE.
MANHOLE STEP EVERY FIFTH COURSE FROM TABLE.

PAGE 34 APPLIES

35

STANDARD DRAIN MANHOLE (OLD CONSTRUCTION)

BASE: FIRST COURSE LAID FLAT (FULL MORTAR), REMAINING COURSES TO BE INSTALLED AS DESCRIBED ON PAGE 35.

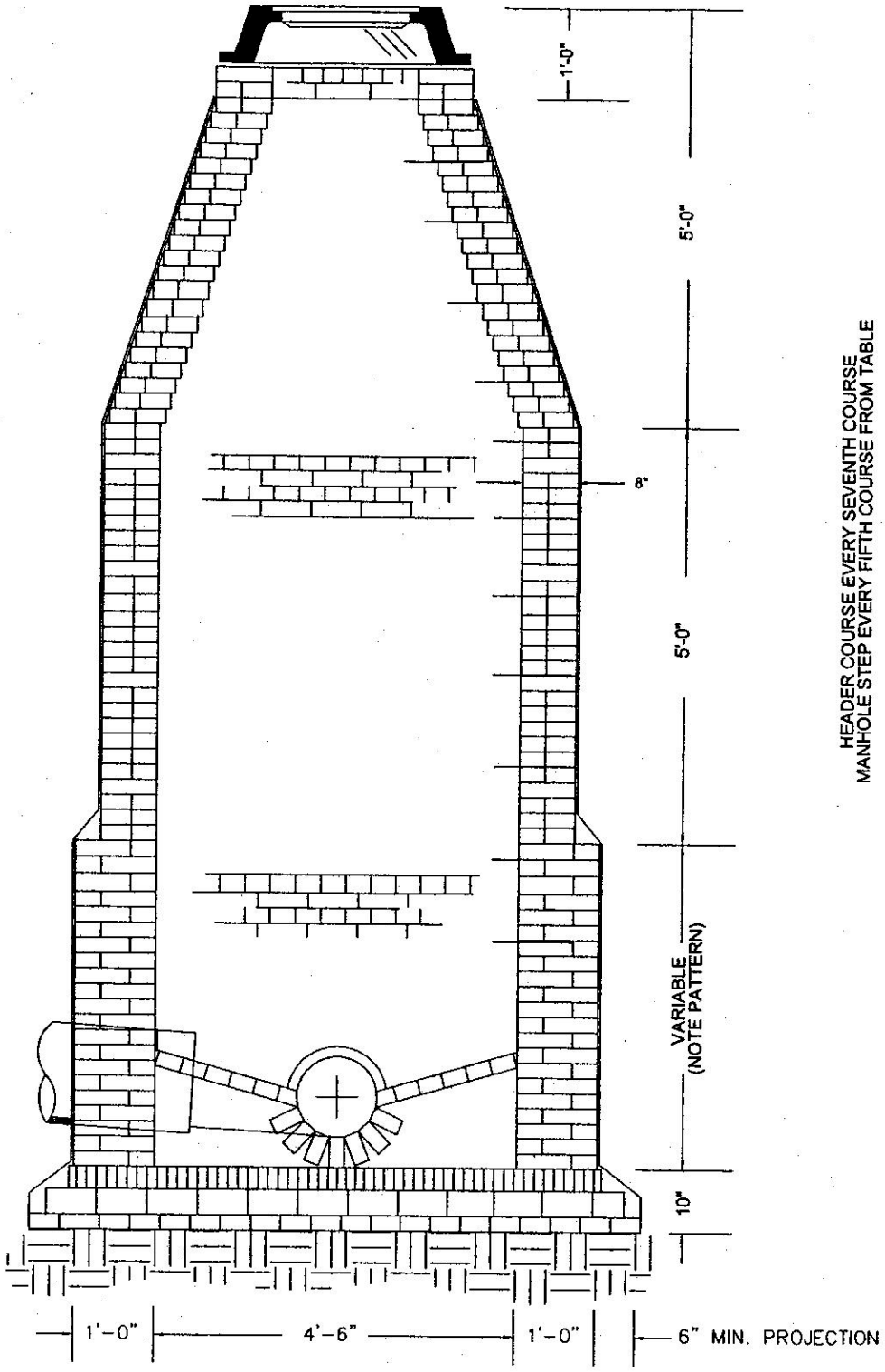

PAGE 34 APPLIES

DRAIN MANHOLE @ DEPTH 10'+ (OLD CONSTRUCTION)

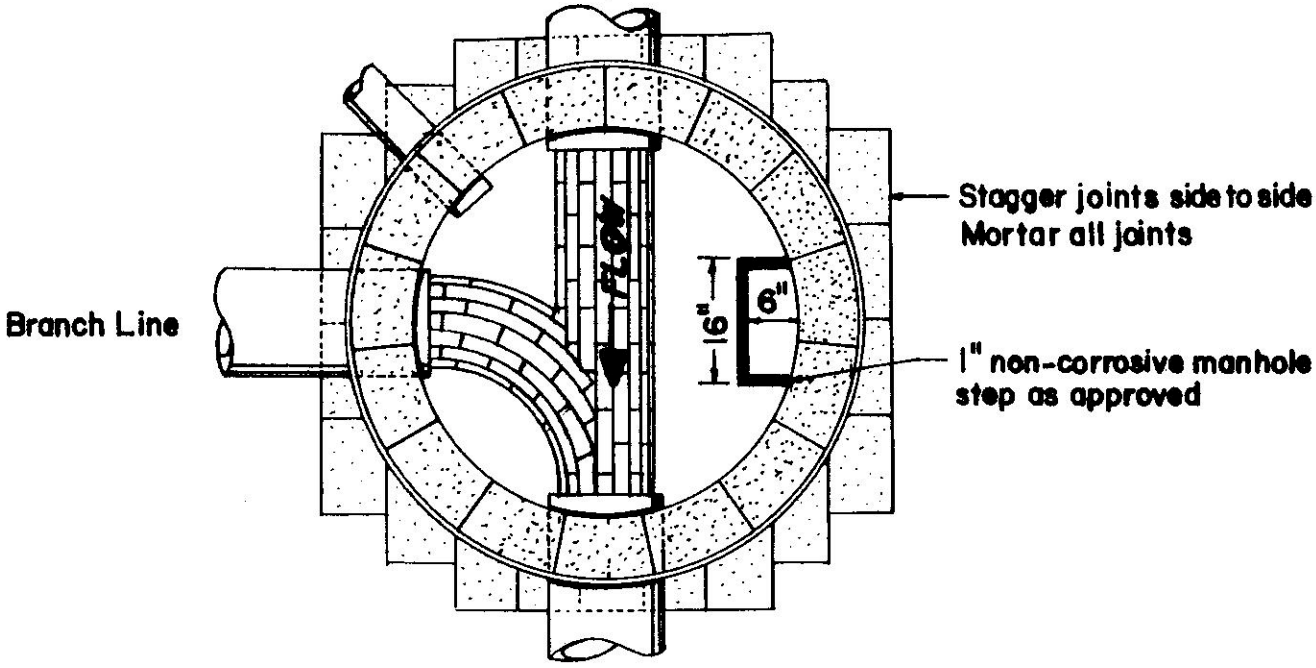

PAGE 25A APPLIES

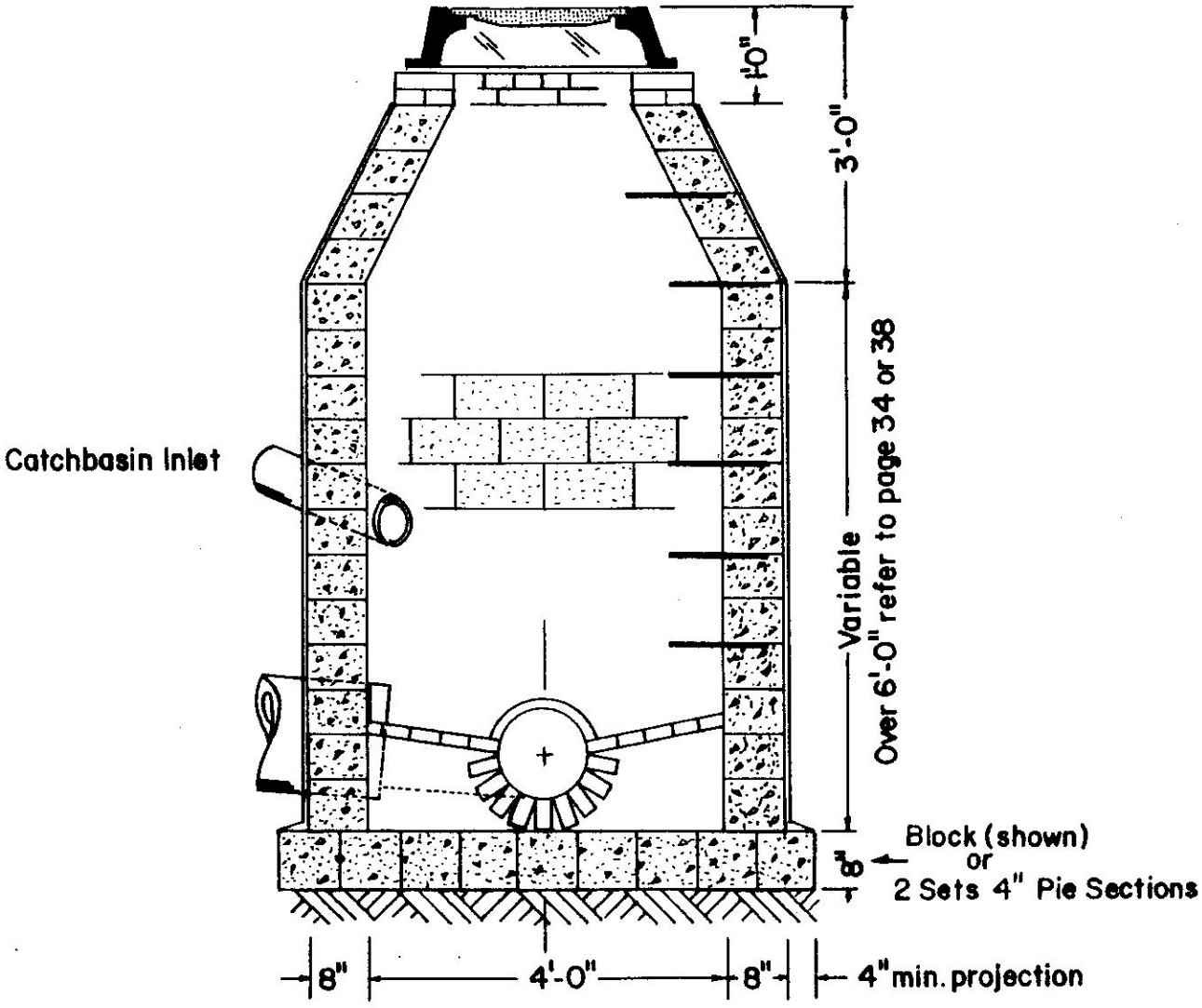

STANDARD DRAIN MANHOLE (CONCRETE BLOCK TYPE)

M. Baldi

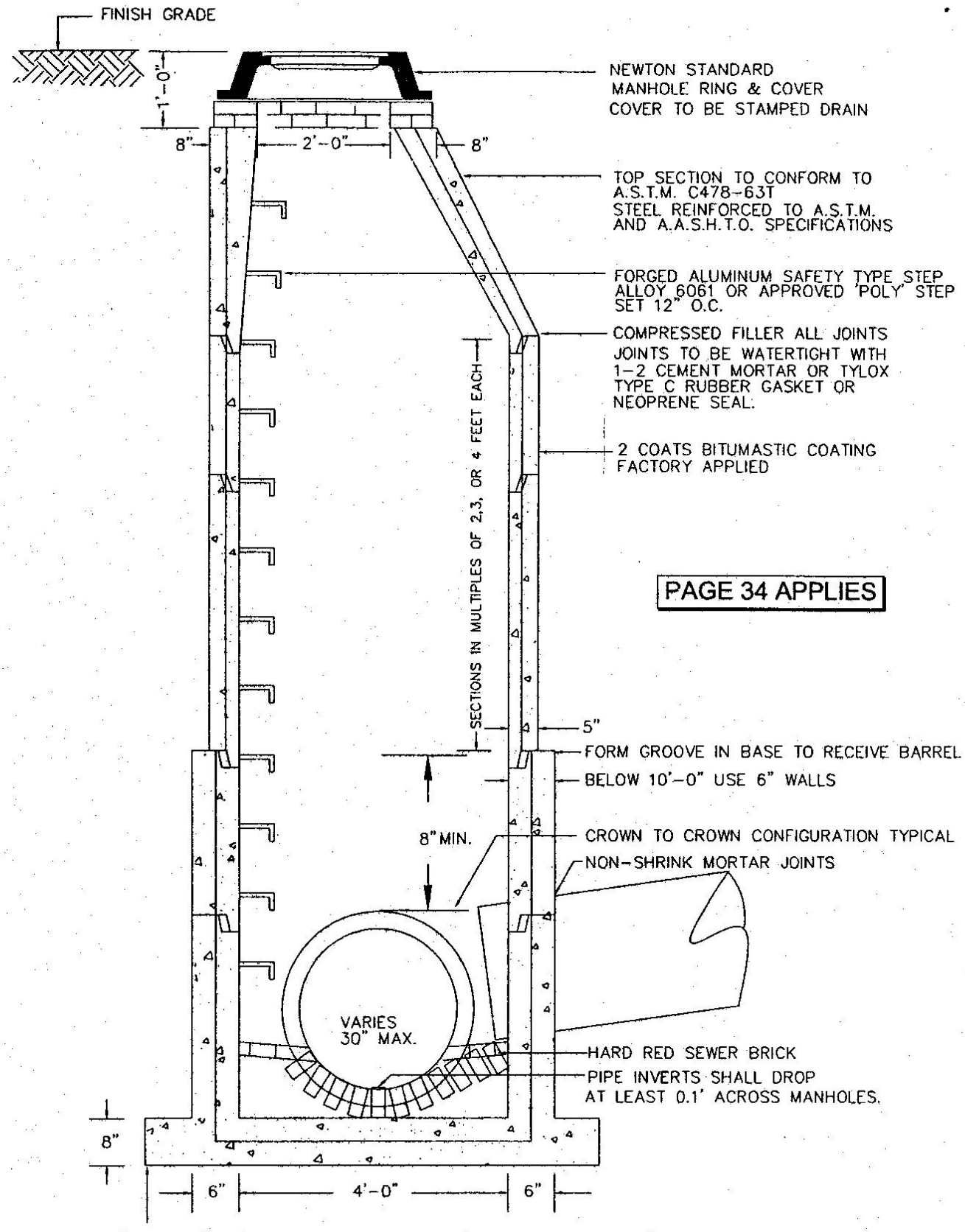

PAGE 34 APPLIES

8" AUXILIARY FLANGE INTREGALLY CAST (IF DEPTH EXCEEDS 9')

OPENINGS ARE TO BE MANUFACTURED INTO THE STRUCTURE

H20 LOADING

PRECAST CEMENT CONCRETE DRAIN MANHOLE

BASE BRICKS LAID FLAT WITH TOP COURSE RUNNING PERPENDICULAR TO BOTTOM COURSE. ALL JOINTS MAY BE LEFT OPEN. STAGGER JOINTS TOP TO BOTTOM AND SIDE TO SIDE.

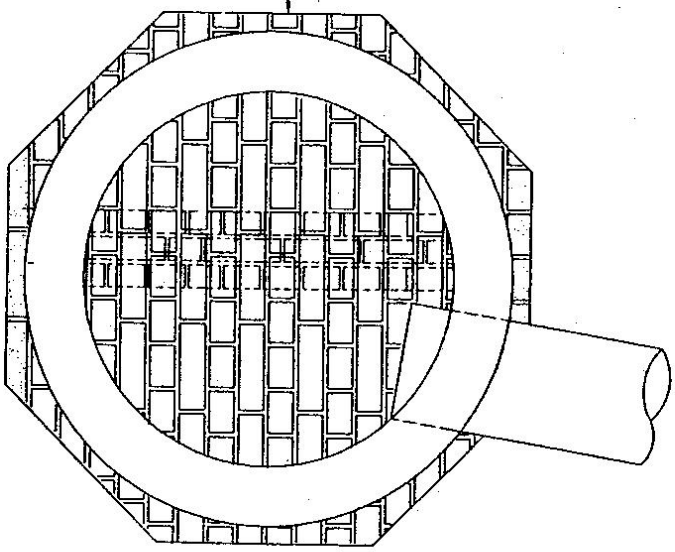

PAGE 34 APPLIES

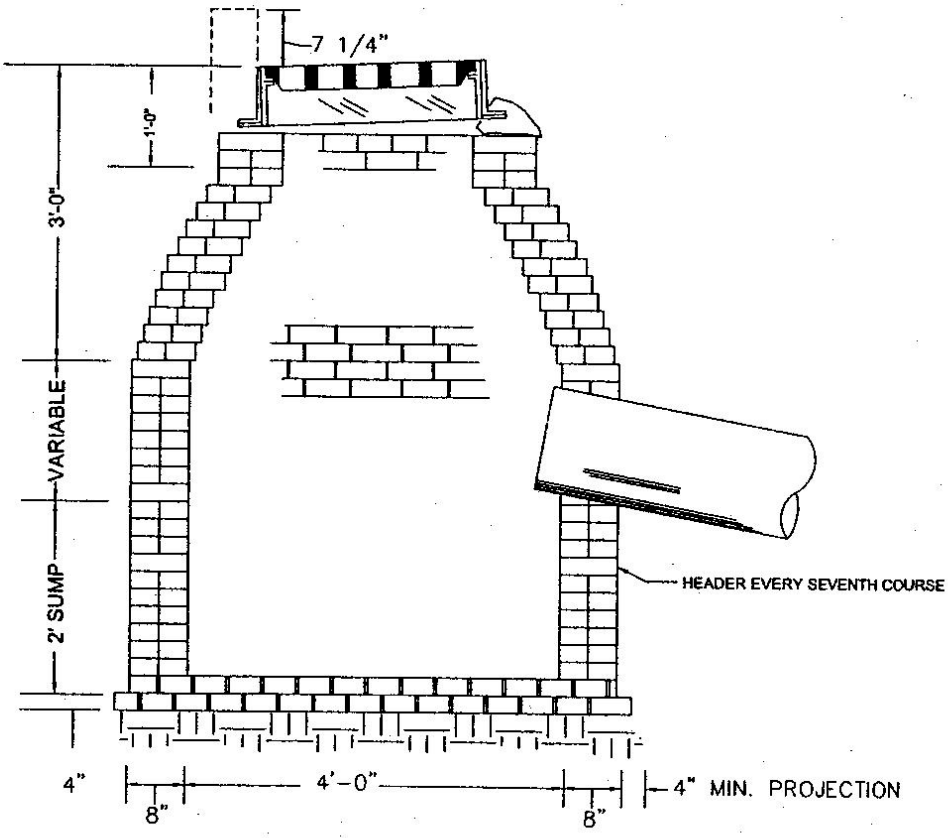

STANDARD CATCHBASIN (OLD CONSTRUCTION)

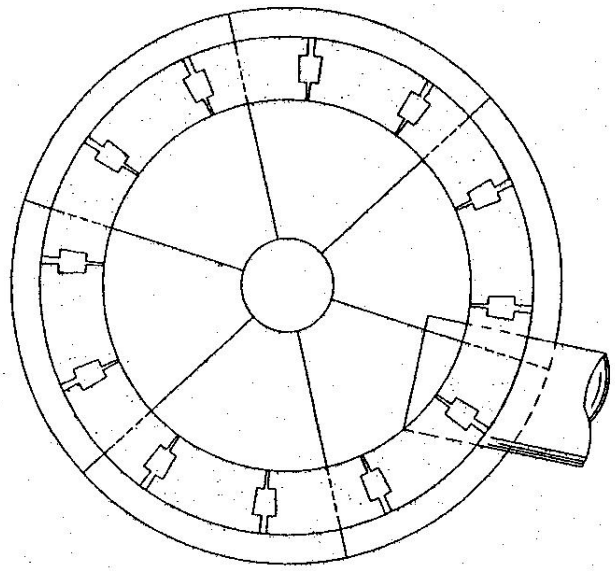

PAGE 34 APPLIES

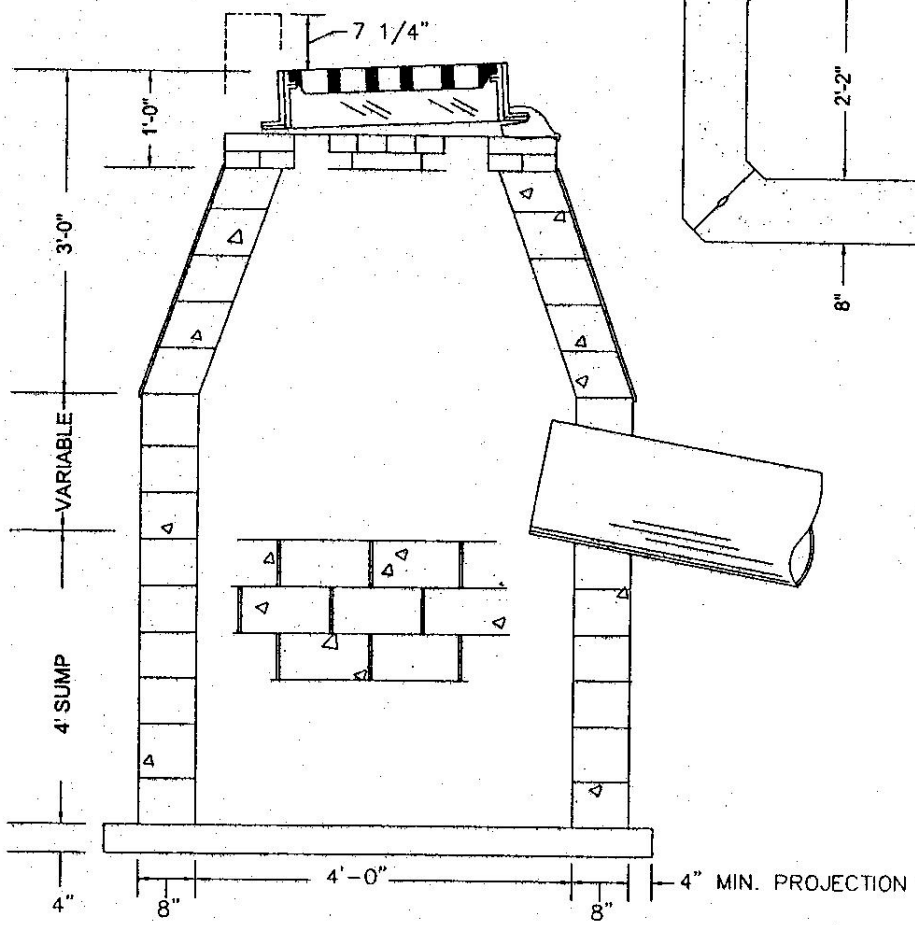

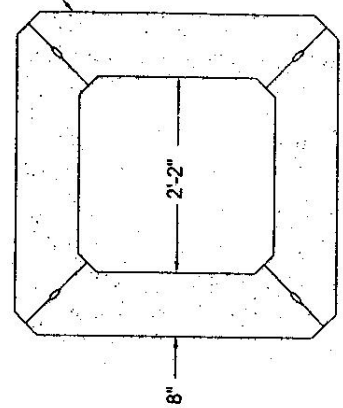

STANDARD CATCHBASIN (CONCRETE BLOCK / NEW CONSTRUCTION)

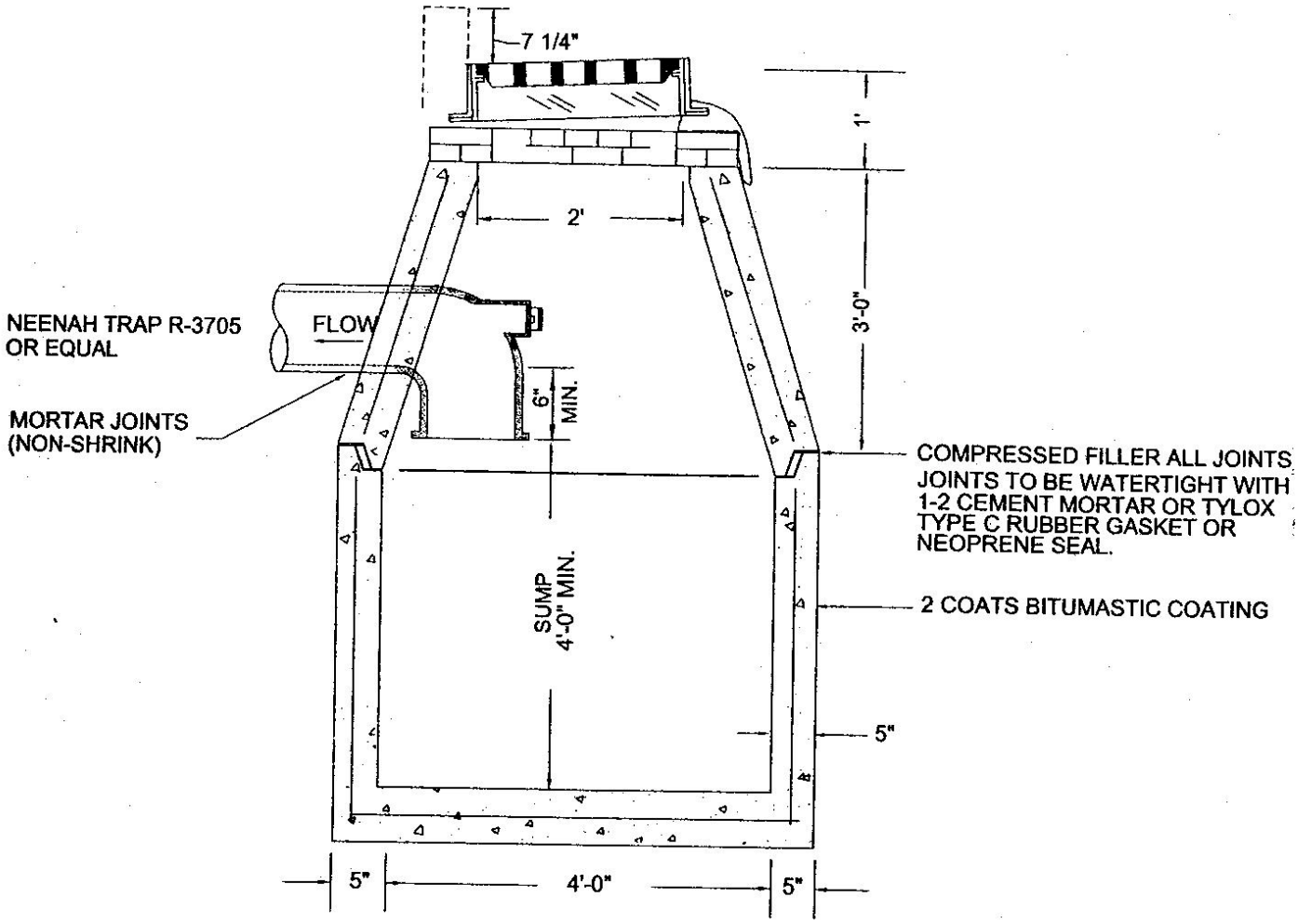

H20 LOADING

4000 PSI @ 28 DAY DENSITY 150 PCF
PORTLAND CEMENT TYPE I OR III PER ASTM C150-81
REINFORCING PER ASTM A615 FOR WIRE FABRIC

WHERE GAS-TRAP CATCHBASINS ARE SPECIFIED THE GAS TRAP IS TO BE INCLUDED IN THE BID PRICE OF THE STRUCTURE.

PAGE 34 APPLIES

TYPICAL PRECAST CONCRETE CATCH BASIN (GAS TRAP TYPE SHOWN)

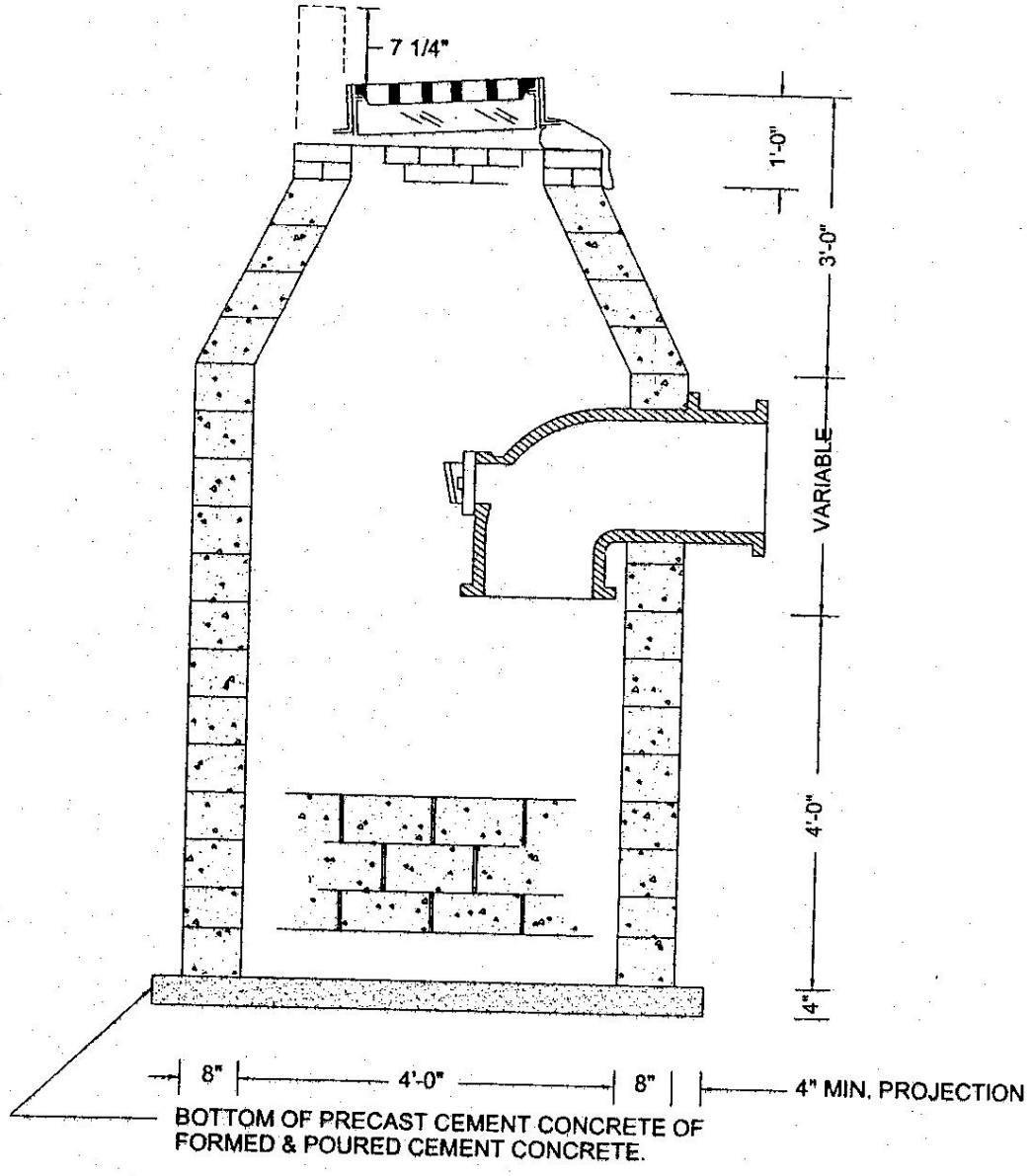

GAS TRAP: NEENAH R-3705 OR APPROVED EQUAL AND IS TO BE INCLUDED IN THE BID PRICE OF THE STRUCTURE.

PAGE 34 APPLIES

SPECIAL CATCHBASIN TO WATERCOURSE (GAS TRAP TYPE SHOWN)

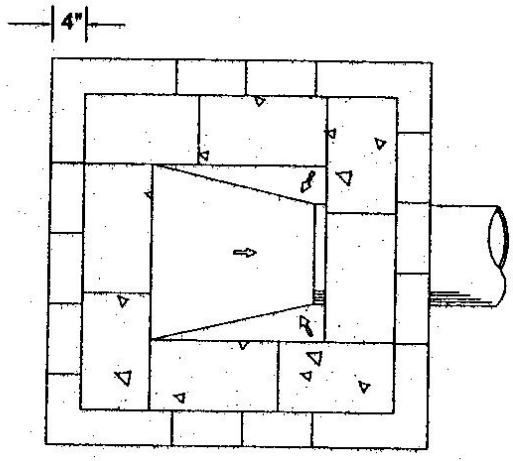

NON-LEACHING
INSIDE DIMENSIONS 2'-0" x 2'-0"

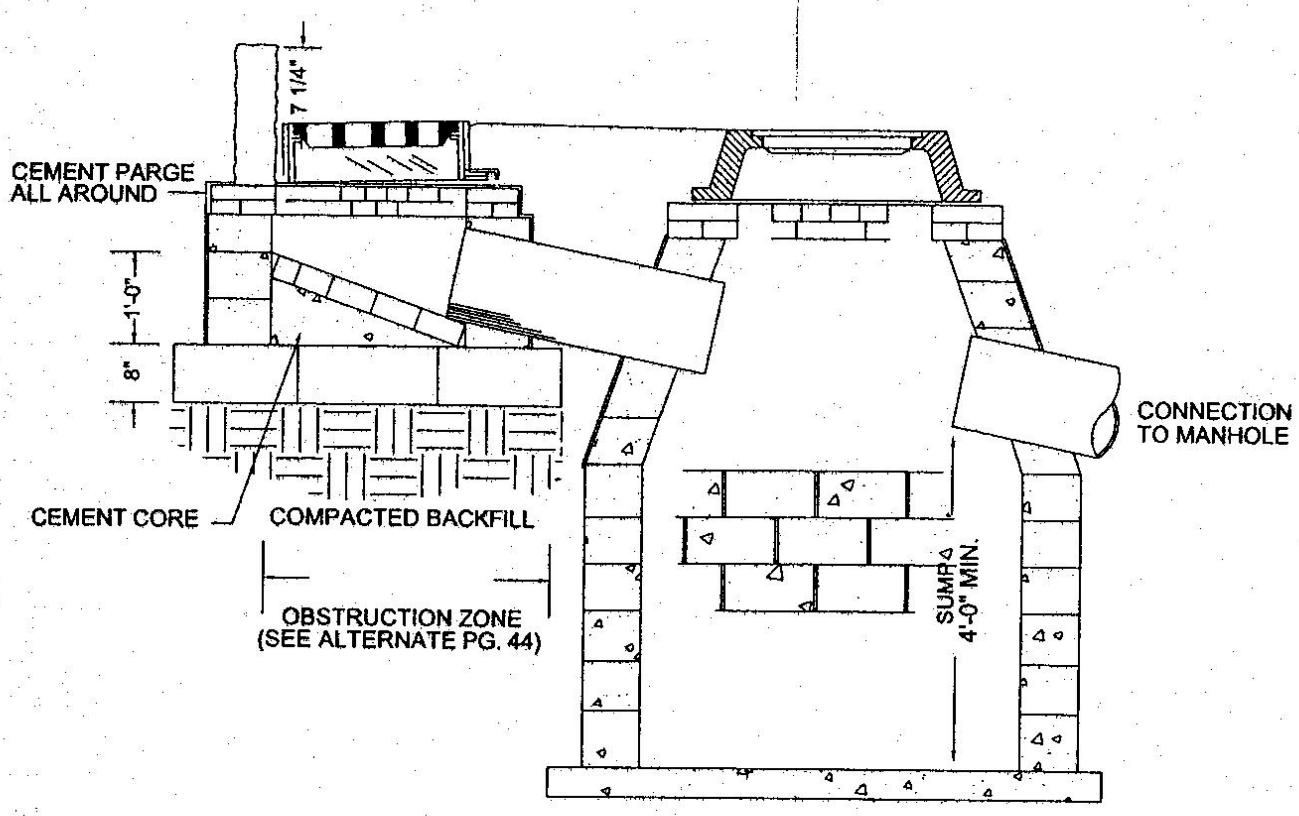

NOTE: DROP INLET EXPLORATION, EXCAVATION AND MASONRY TO BE PAID AT AT ONE-HALF (1/2) CATCHBASIN BID PRICE.

PAGE 34 APPLIES

DROP INLET (PIPE TO PIPE)

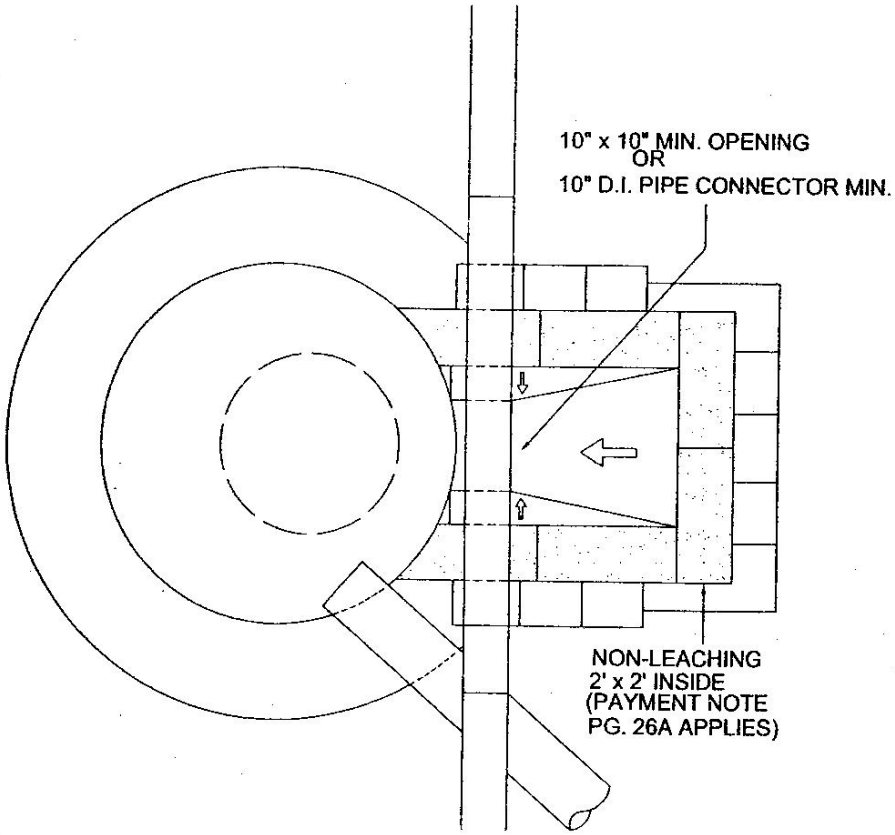

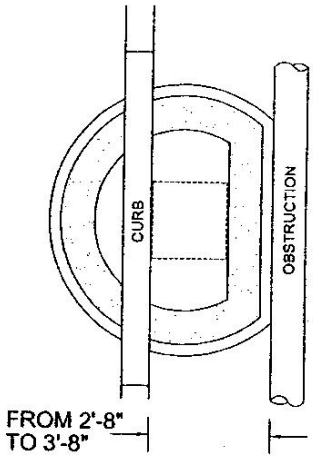

"D" TYPE
(PLAN VIEW SHOWING BASE COURSE)

PAGE 34 APPLIES

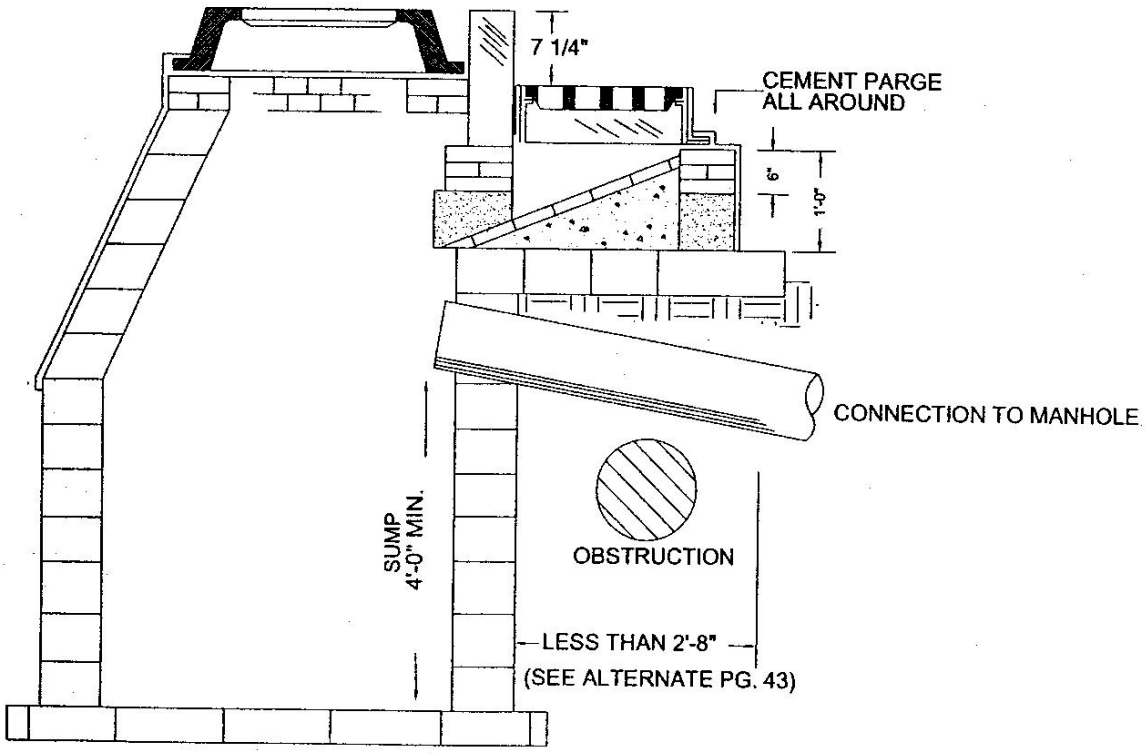

DROP INLET (CHUTE AND "D" TYPES)

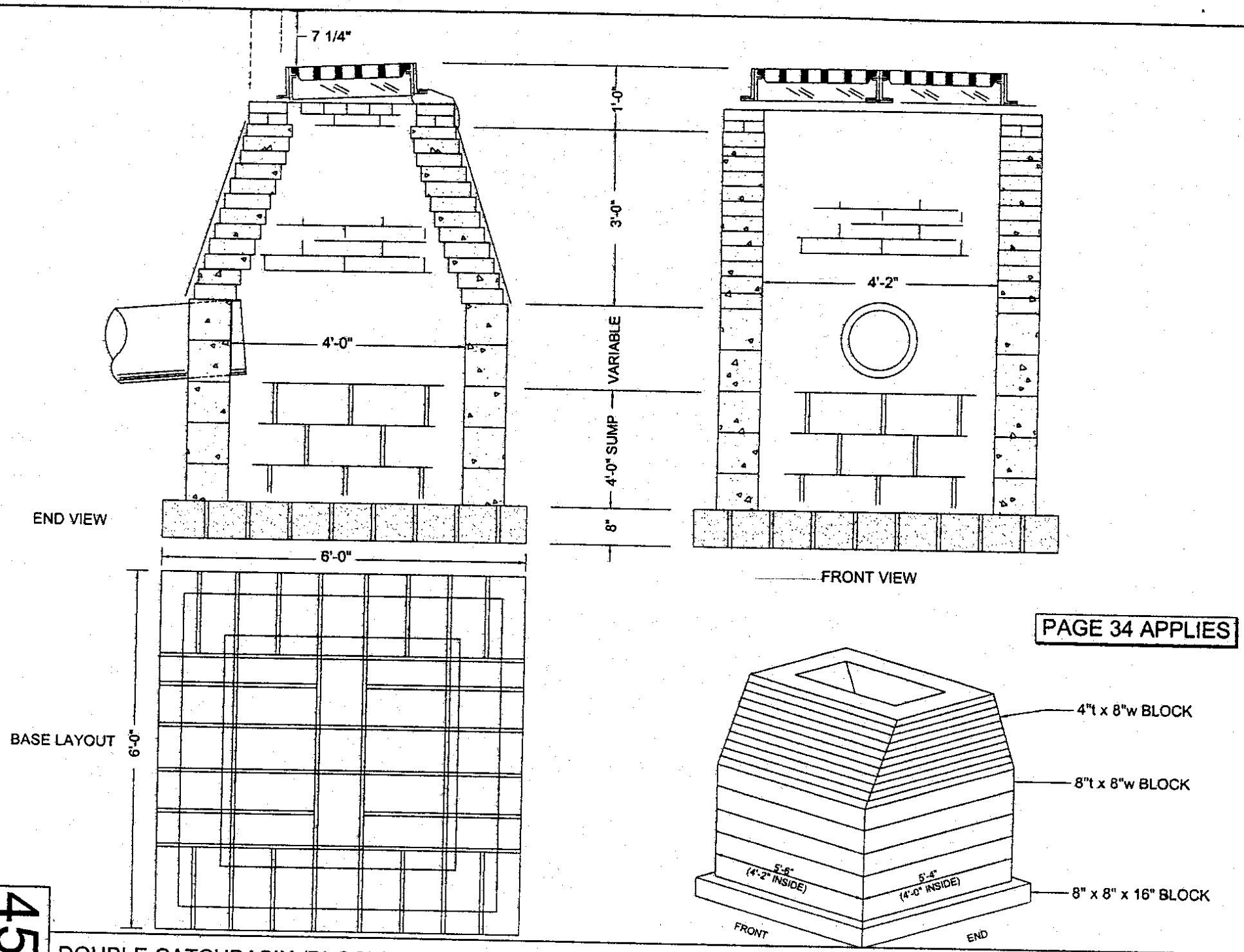

45

DOUBLE CATCHBASIN (BLOCK)

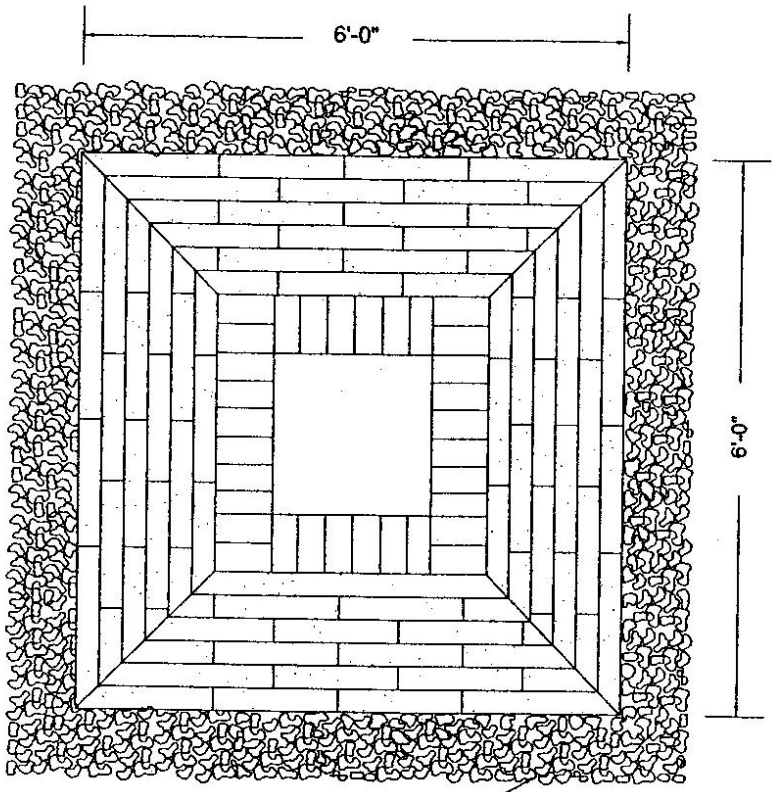

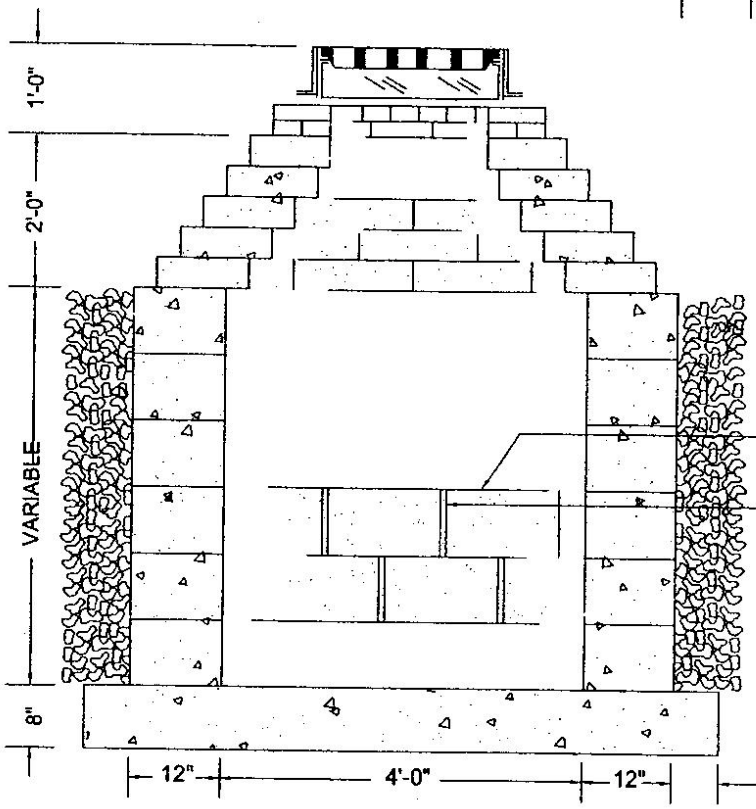

PAGE 34 APPLIES

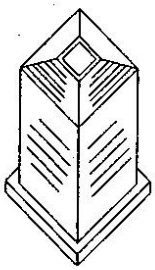

NOTE: PRE-CAST OR MODULAR ROUND UNITS MAY BE SUBSTITUTED BY APPROVAL OF THE CITY ENGINEER.

DRYWELL CATCHBASIN (BLOCK TYPE)

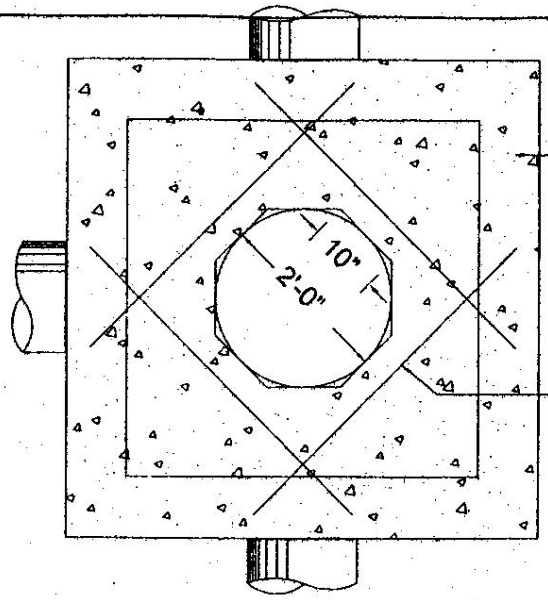

4000 PSI
CEMENT CONCRETE

4-#5 REINFORCING BARS
DIAGONALLY SET
(SEE BELOW)

PAGE 34 APPLIES

BRANCH
LINE

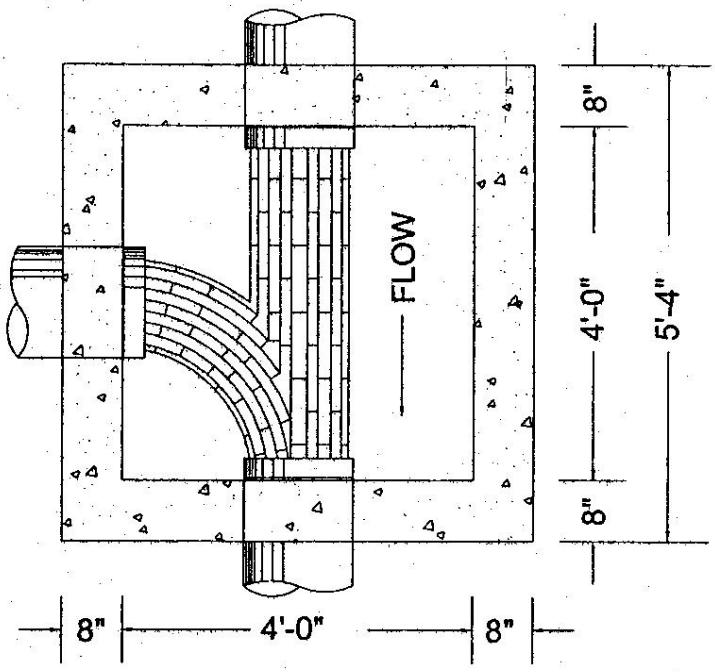

#5 REINFORCING
BARS
8" O.C.
BOTH WAYS

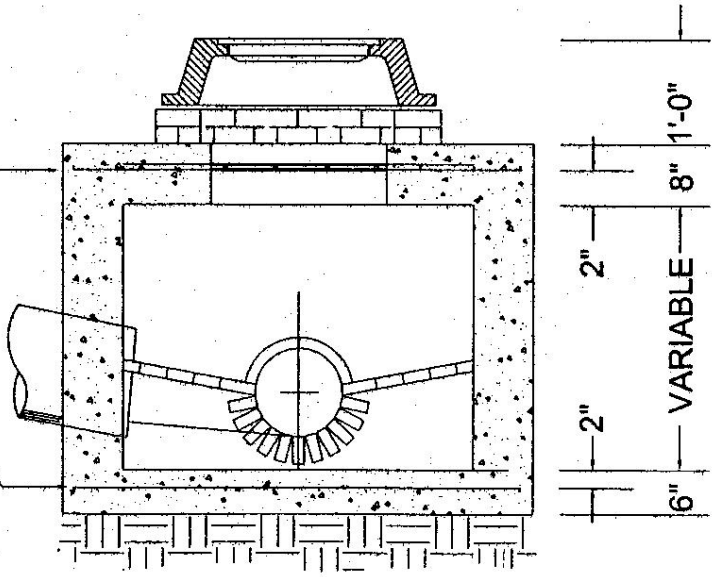

SHALLOW CUT MANHOLE

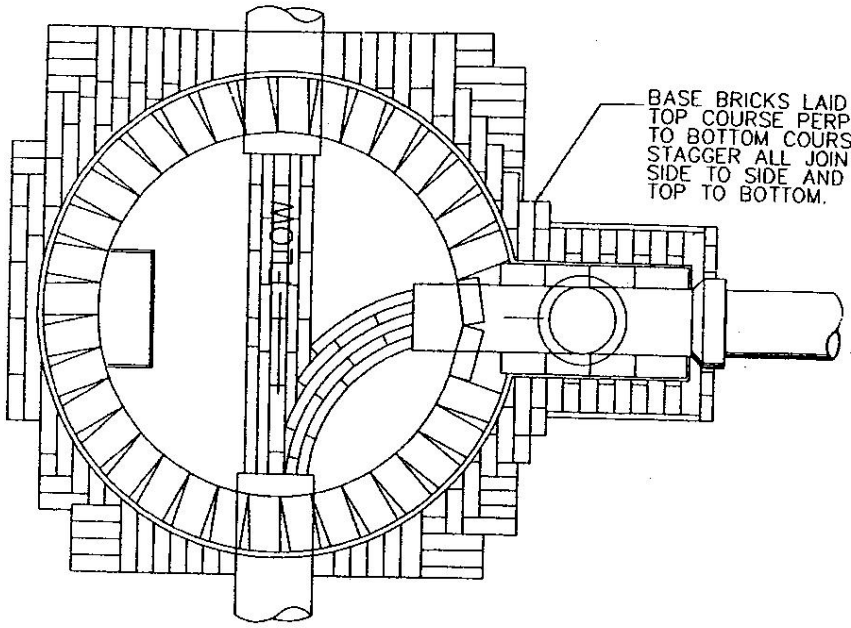

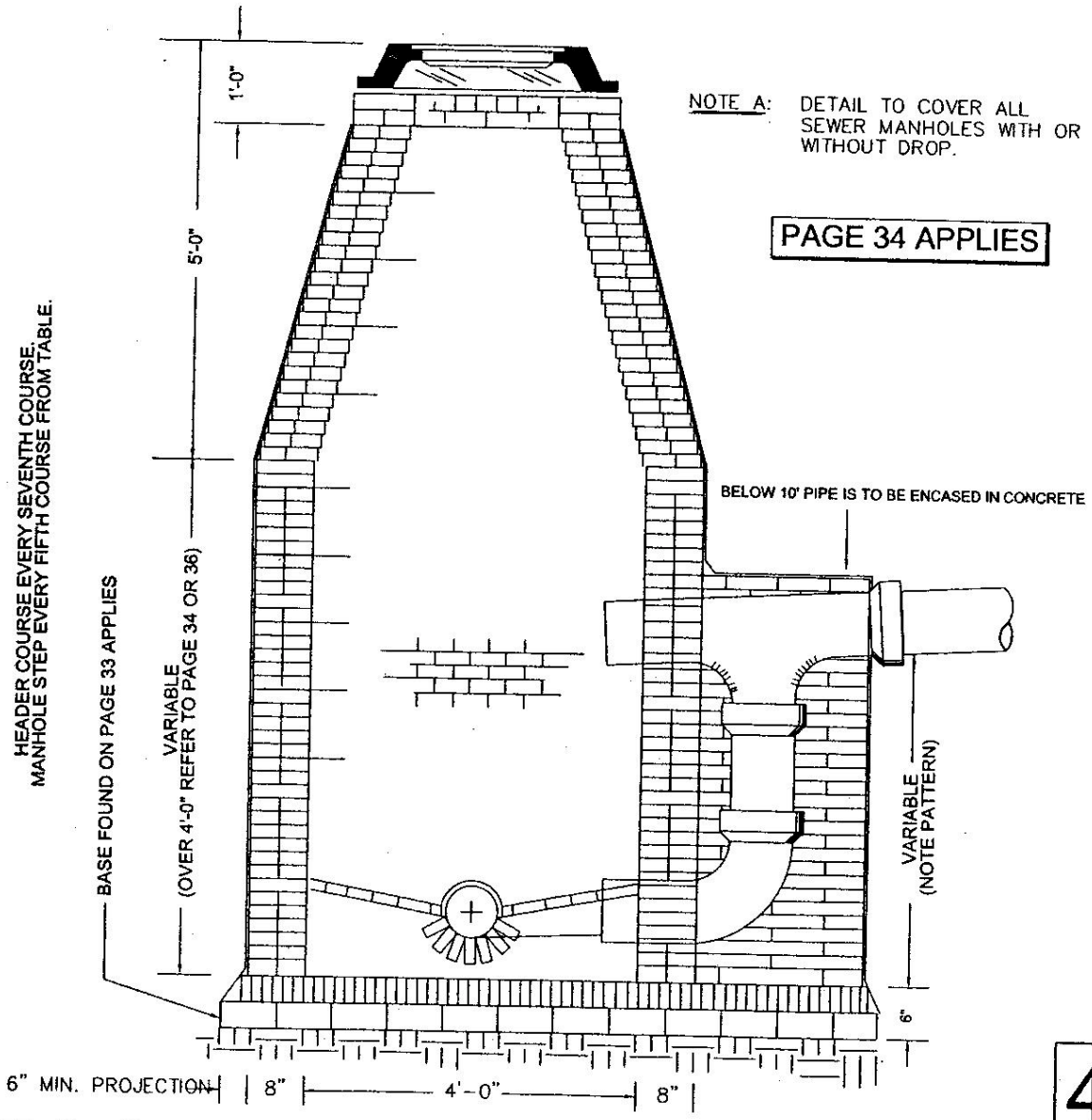

NOTE A: DETAIL TO COVER ALL SEWER MANHOLES WITH OR WITHOUT DROP.

PAGE 34 APPLIES

STANDARD SEWER MANHOLE (OLD CONSTRUCTION)

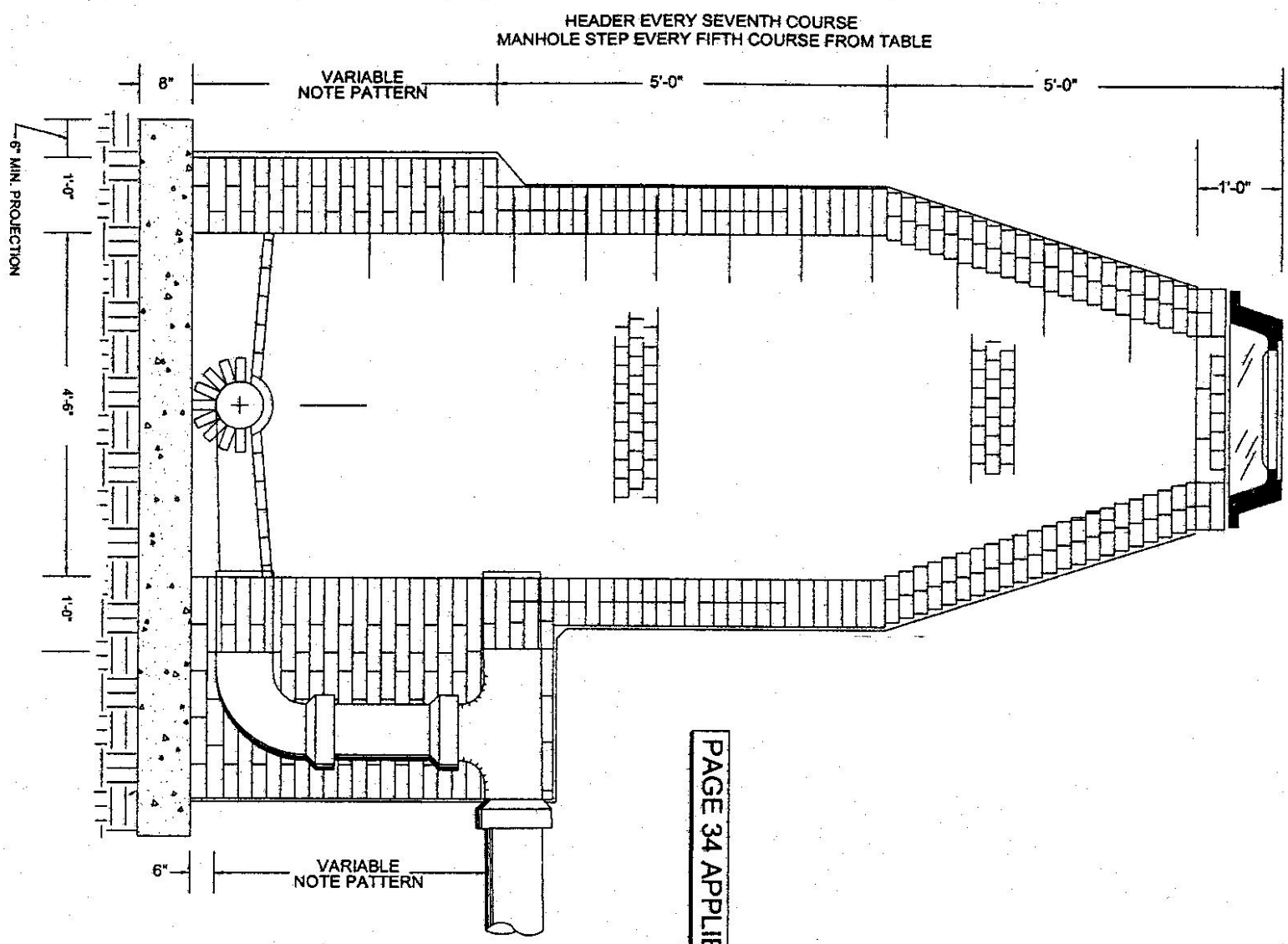

PAGE 34 APPLIES

49

SPECIAL SEWER MANHOLE- DEPTH 10'+ (OLD CONSTRUCTION)

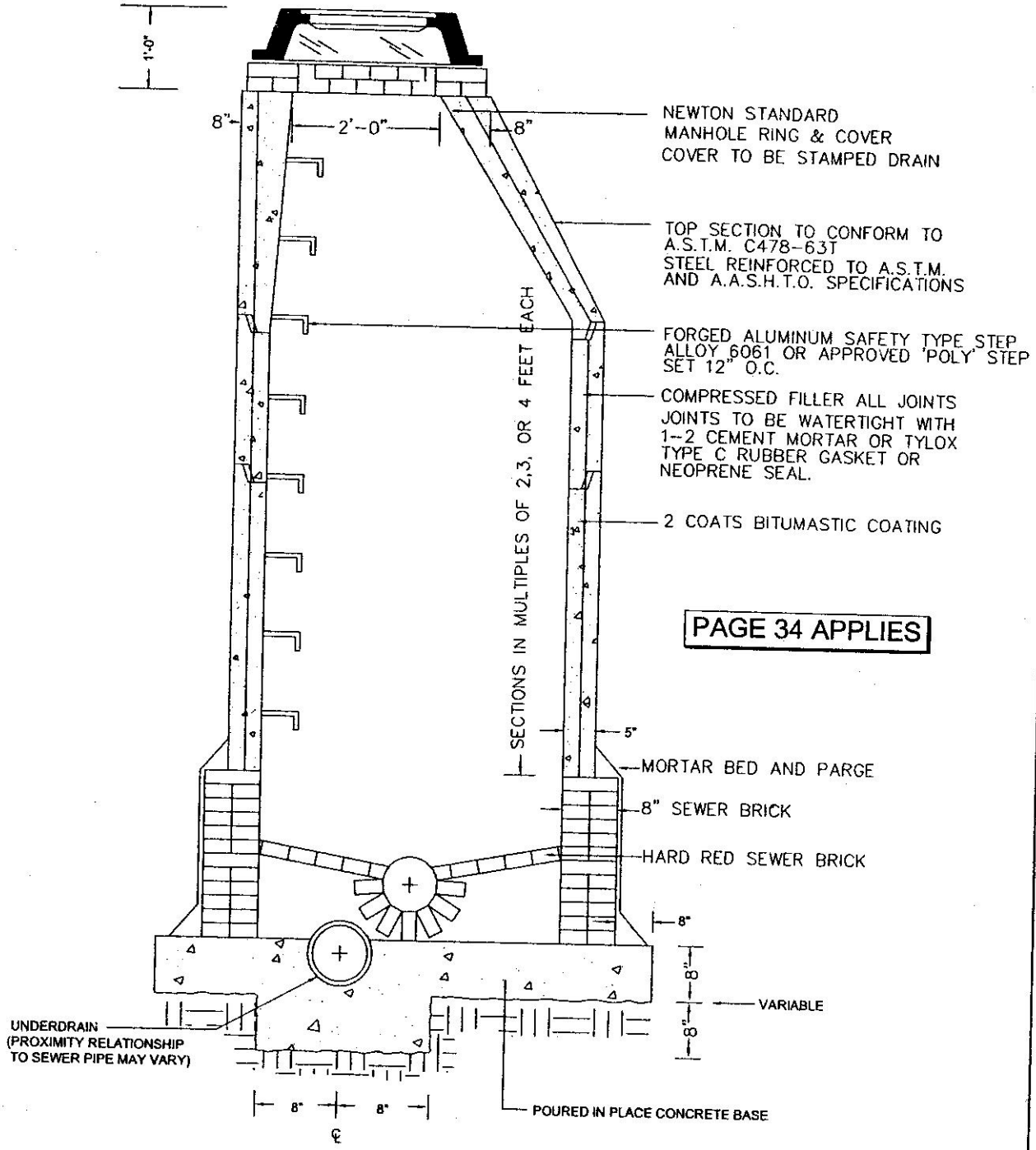

PAGE 34 APPLIES

H20 LOADING

RETROFIT SEWER MANHOLE OVER UNDERDRAIN

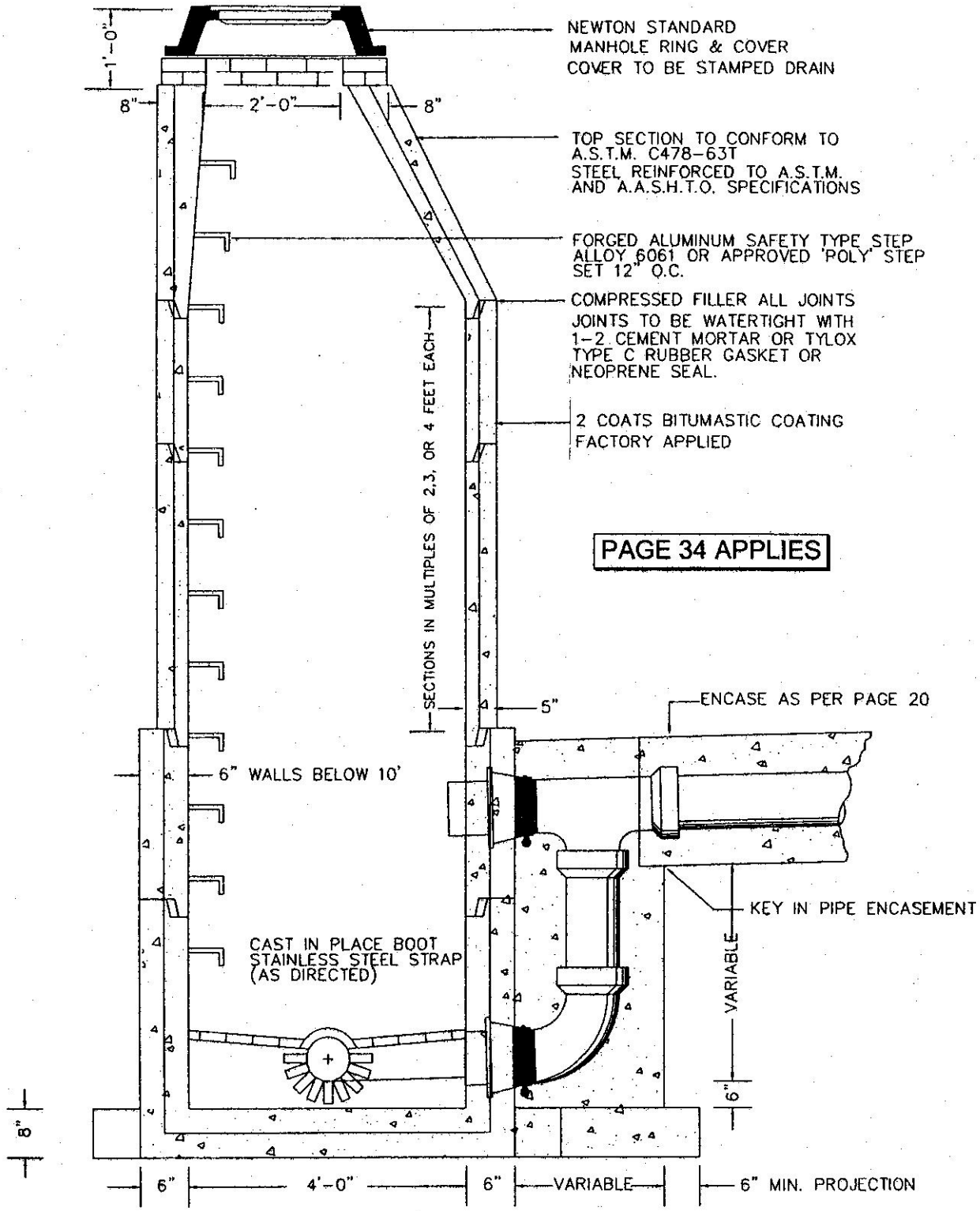

8" AUXILIARY FLANGE INTREGALLY CAST (IF DEPTH EXCEEDS 9')

OPENINGS ARE TO BE MANUFACTURED INTO THE STRUCTURE

PRECAST CEMENT CONCRETE SEWER MANHOLE & OUTSIDE DROP

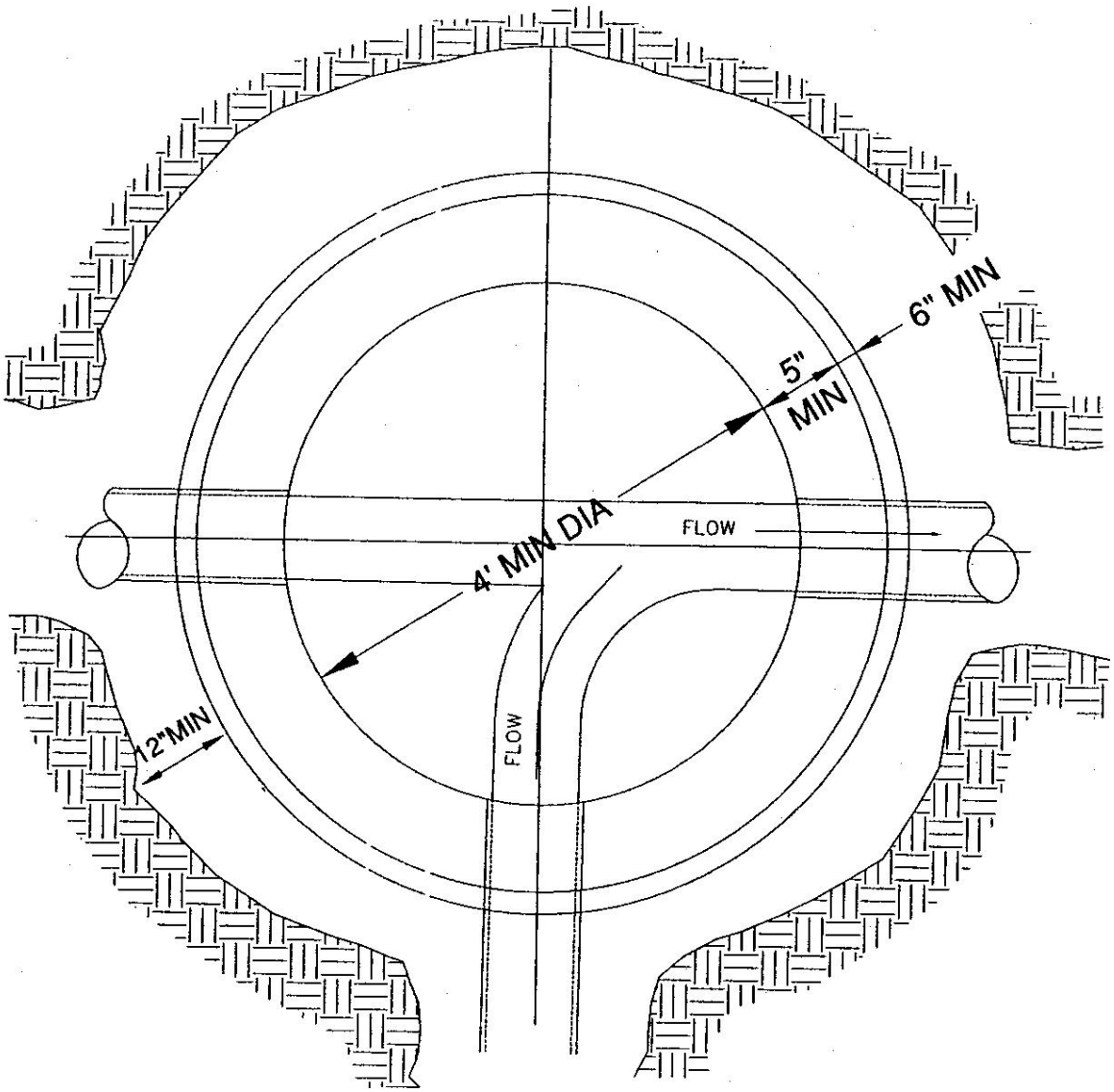

INVERT OF LATERAL
IS SPRINGLINE OF MAIN

TOP VIEW

PAGE 34 APPLIES

TYPICAL SEWER INVERT TABLE PLAN

INTERIOR DROPS ARE TO
BE USED ONLY BY APPROVAL

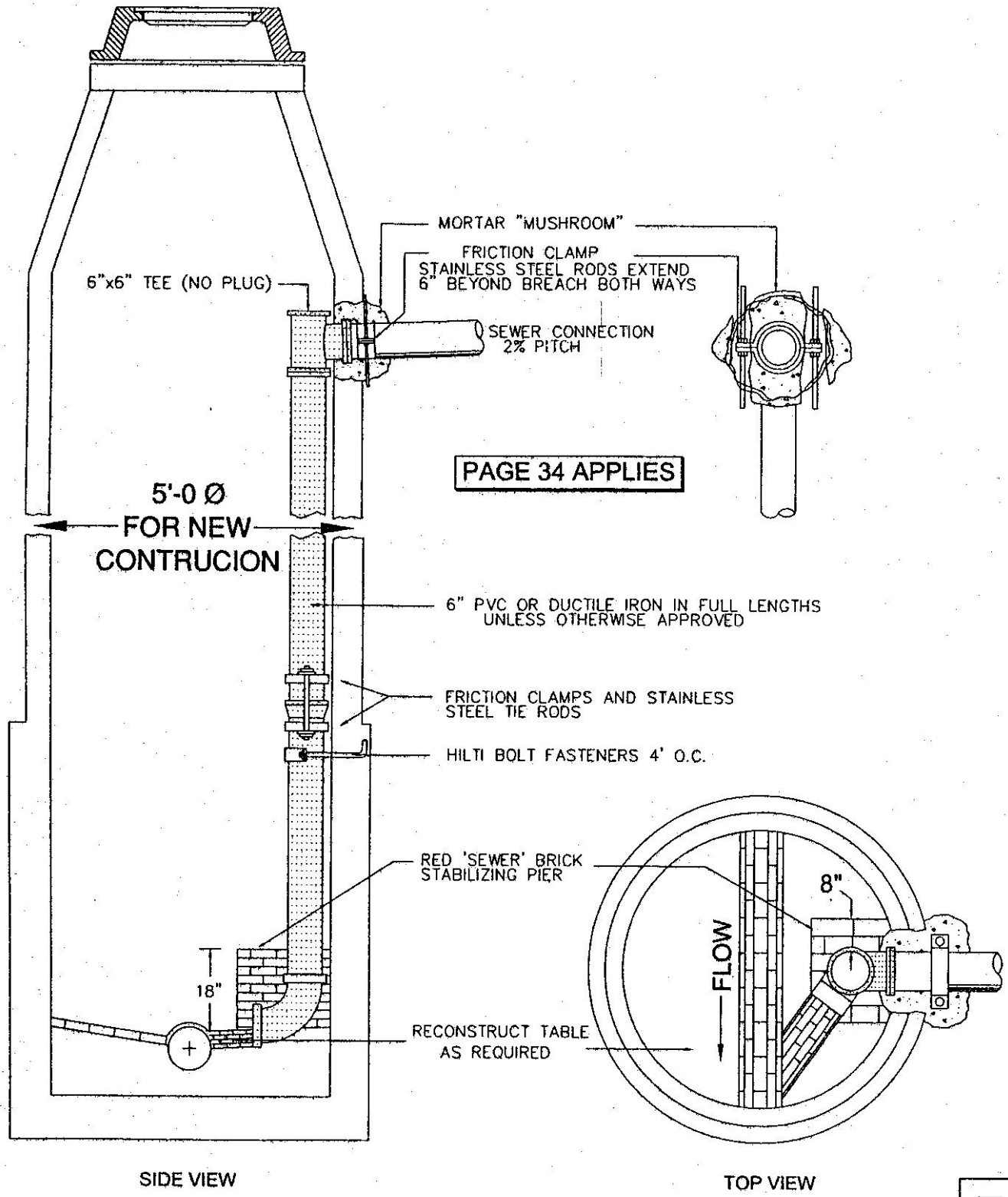

SEWER SERVICE INTERIOR DROP MANHOLE

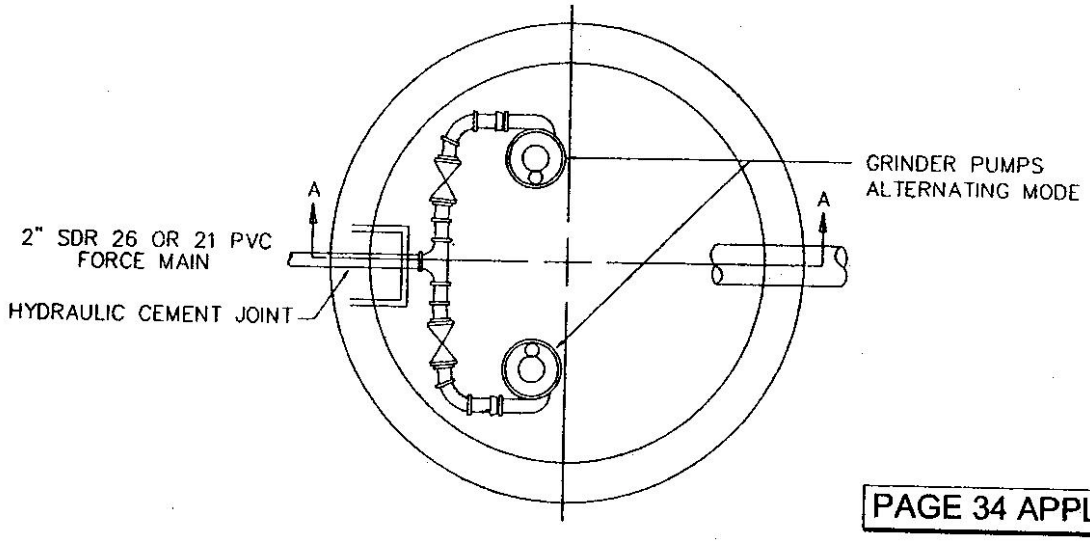

PAGE 34 APPLIES

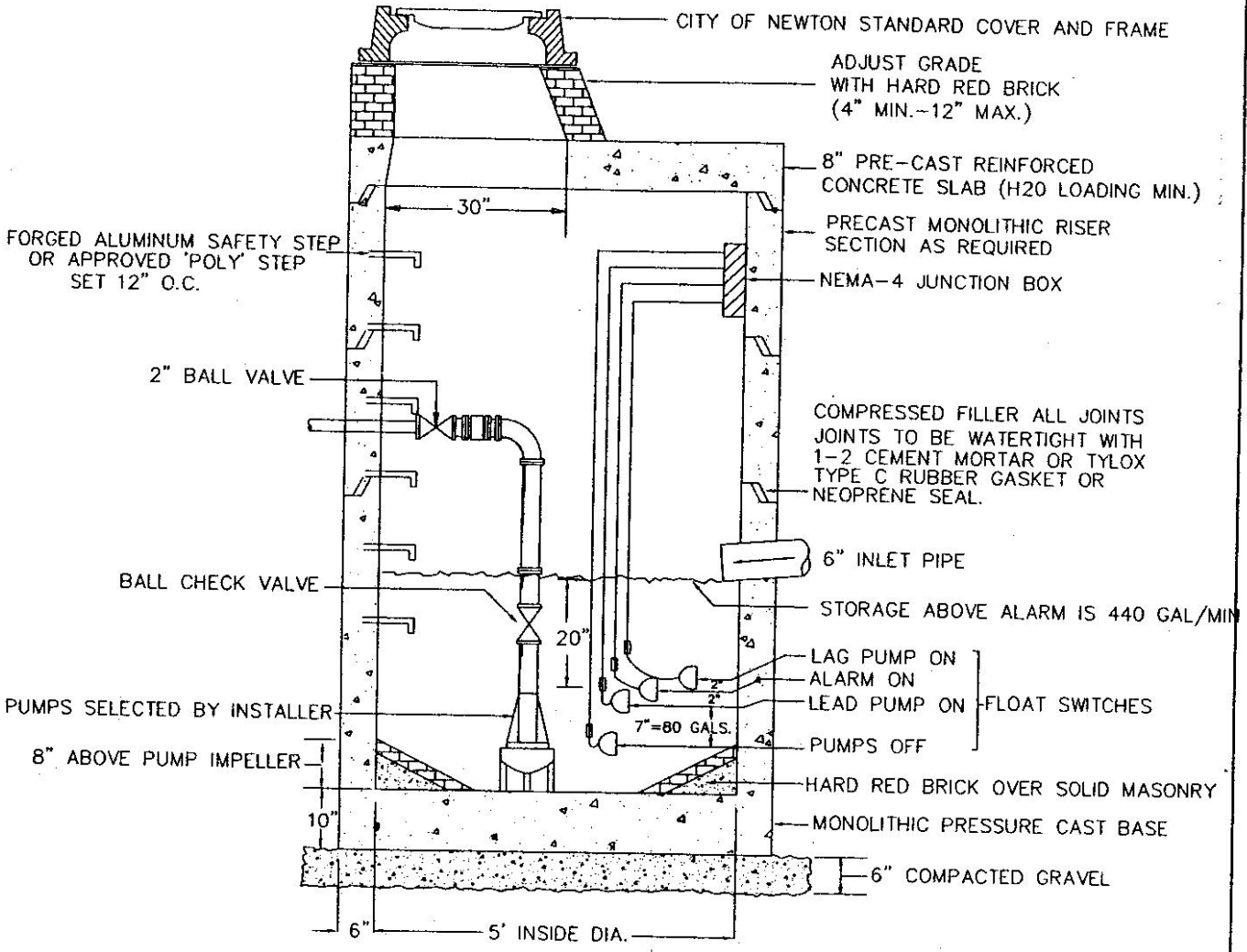

SECTION A-A

TYPICAL SEWER LIFT STATION (TYPICAL 4 BEDROOM SINGLE FAMILY)

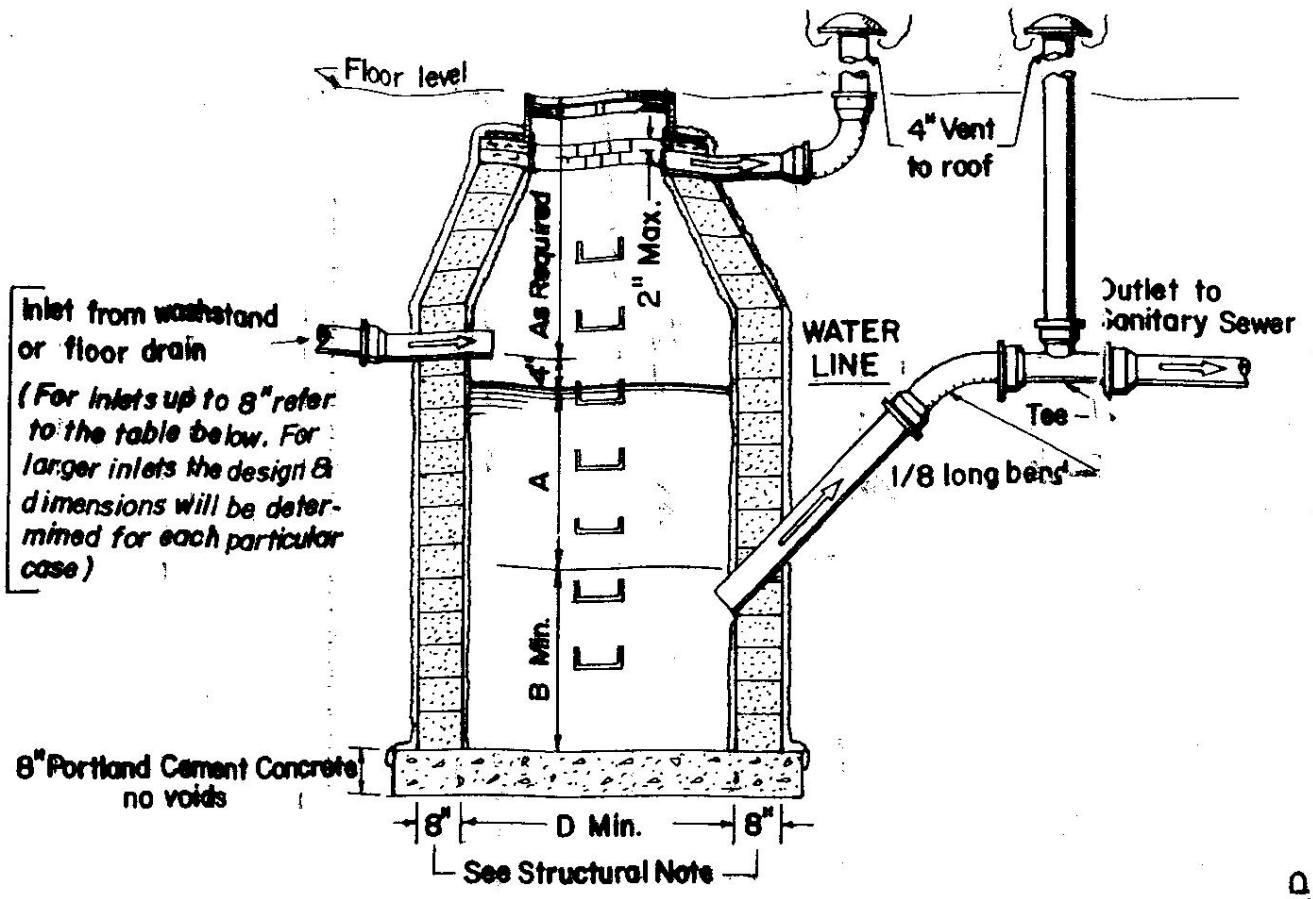

STRUCTURAL NOTES:

WALLS: 8" Solid concrete blocks with full mortared joints & keys plastered inside & outside with 3/8" thick mortar. (Shown)

or

8" Poured-in-place concrete

or

8" Red brick masonry plastered with 3/8" thick mortar on the inside.

or

Precast concrete sections (See pg. 38).

PIPE: All pipe below floor level (and/or grade) is to be of an approved ductile iron.

STEPS: 1" non-corrosive as approved & set 12" O.C..

GENERAL: Basin is to be filled with clean water before using and after being emptied for periodic cleaning.

All oil & gasoline must be removed before cleaning and must not be discharged into the sewer system.

Basin and appurtenances must meet M.D.C. and City of Newton plumbing inspectors approval.

APPLICABLE DIRECTIVES FOUND ON PAGE 25A APPLY.

(Recommended)
CIRCULAR STRUCTURE

INLET	D	A	B
4"	3.5	3.0	2.5
	4.0	2.25	2.0
5"	3.5	5.0	4.0
	4.0	3.5	3.0
	4.5	3.0	2.5
6"	4.0	5.0	4.5
	4.5	4.0	3.5
	5.0	3.0	2.5
8"	5.0	6.0	5.0

SQUARE STRUCTURE

INLET	D	A	B
5"	3.5	5.0	4.0
	4.0	3.0	2.5
6"	4.0	4.0	3.5
	4.5	3.5	3.0
	5.0	3.0	2.5
8"	5.5	4.5	4.0
	6.0	3.0	2.5
	6.5	3.0	2.5

STANDARD M.D.C. CATCHBASIN & GASOLINE TRAP

BLEEDER DRAIN

BLEEDER PIPE IS TO BE CONNECTED TO CATCHBASINS AND/OR MANHOLES ON THE "UPHILL" SIDE ONLY AND AT A LEVEL NO LOWER THAN THE UNIT

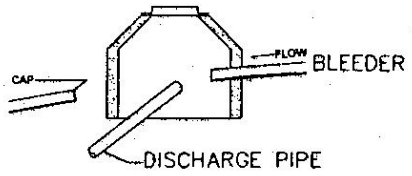

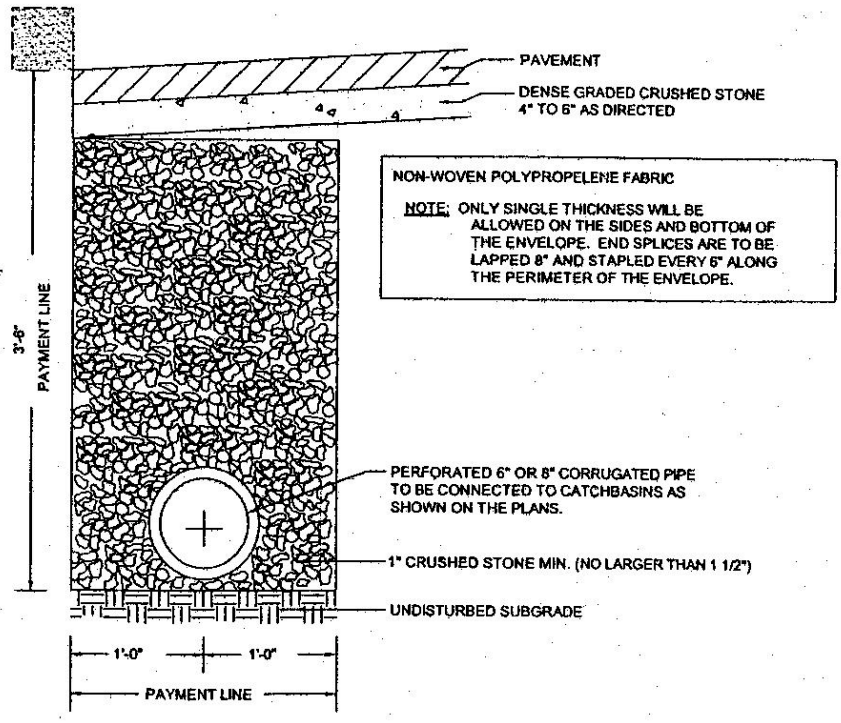

HEADWALL AT DRAIN OUTLET

(WING WALL MAY BE REQUIRED, SEE ADDITIONAL DETAIL ON PLANS)
* MIN. 5' WING WALL

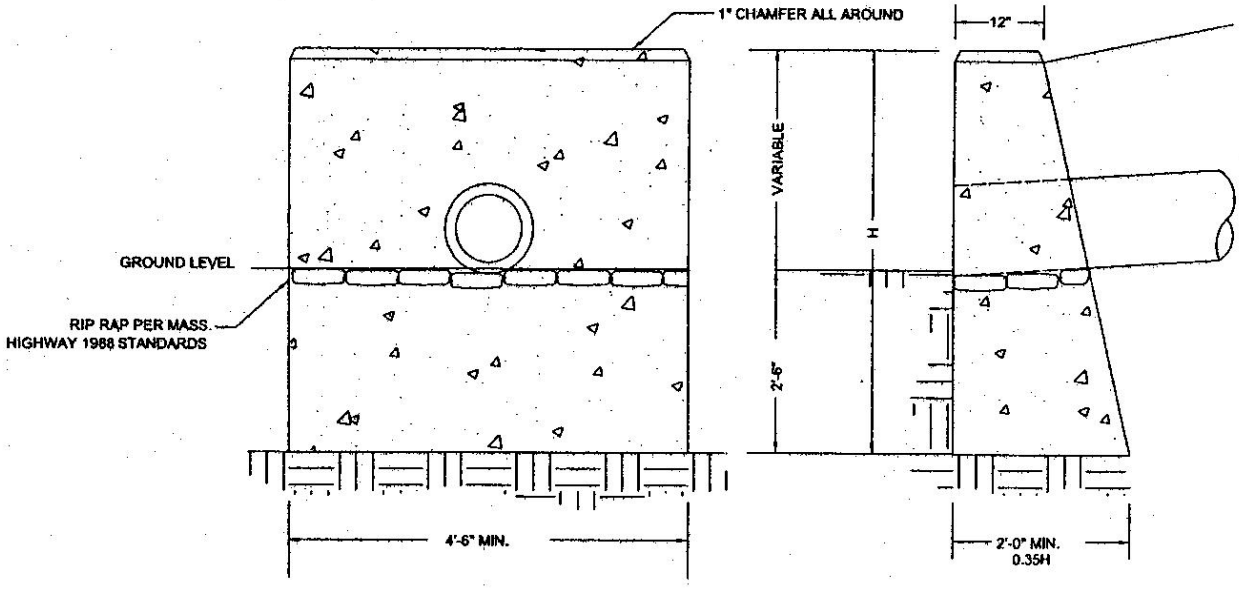

CONCRETE: FULL FORM POUR WITH AIR ENTRAINED CEMENT CONCRETE, (4000 LB. AT 28 DAYS) SEE SPECIAL PROVISIONS-SECTION 31, PAR.(d).

TYPICAL UNDERDRAIN AND HEADWALL

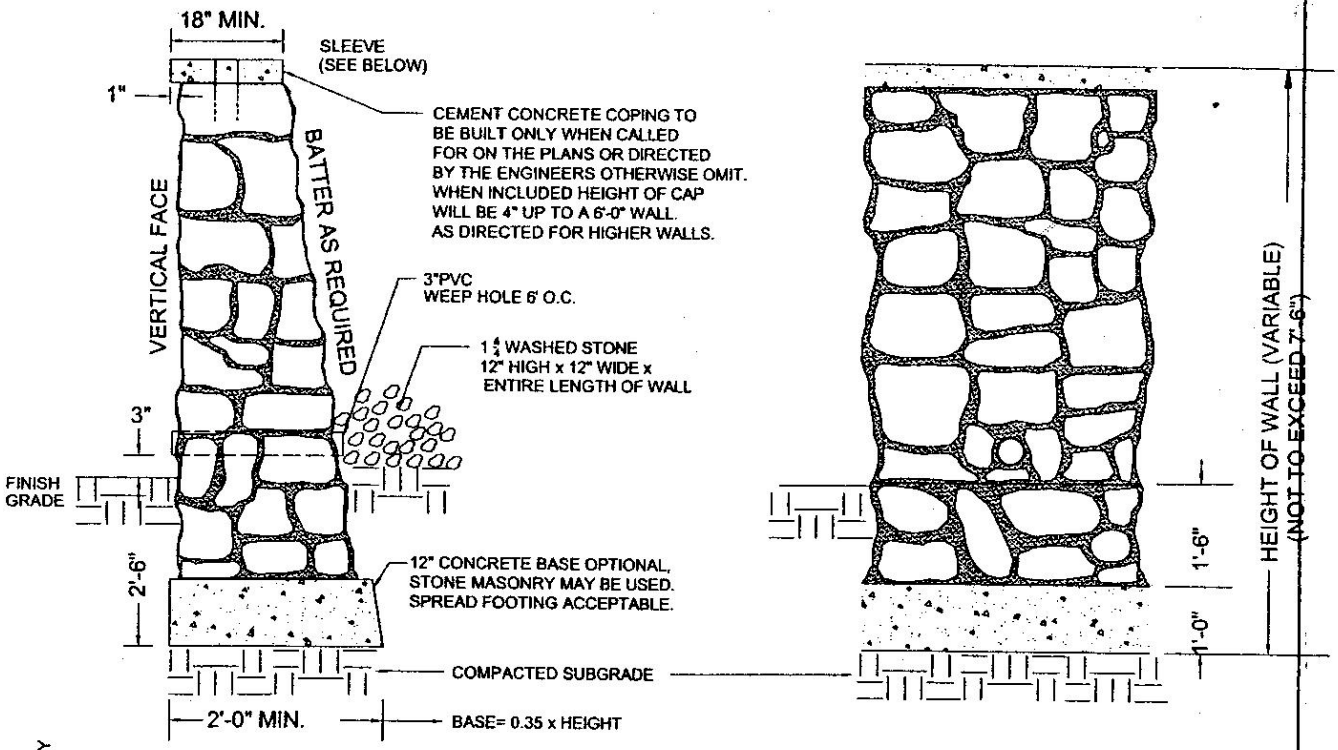

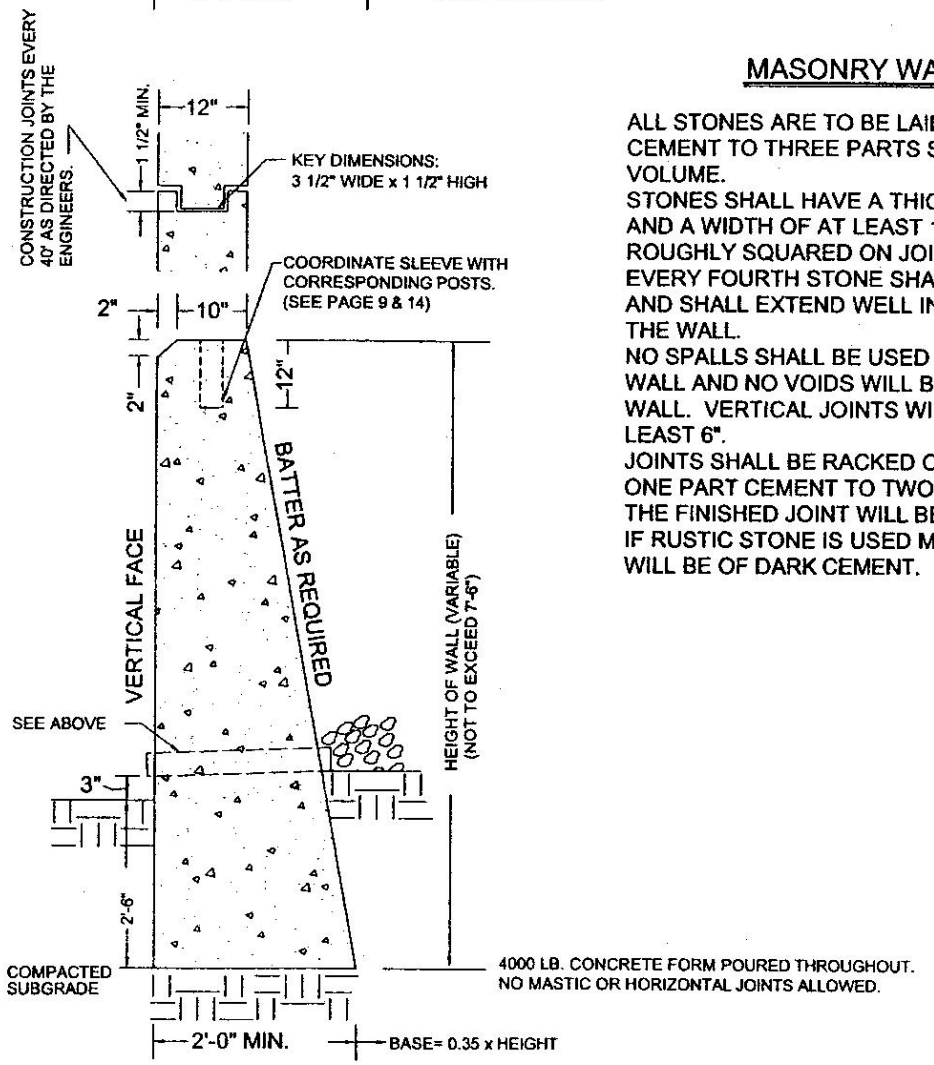

MASONRY WALL

ALL STONES ARE TO BE LAID IN ONE PART CEMENT TO THREE PARTS SAND MORTAR BY VOLUME.
STONES SHALL HAVE A THICKNESS OF 8" AND A WIDTH OF AT LEAST 12", THEY SHALL BE ROUGHLY SQUARED ON JOINTS, BEDS AND FACES.
EVERY FOURTH STONE SHALL BE A HEADER AND SHALL EXTEND WELL INTO THE BACK OF THE WALL.
NO SPALLS SHALL BE USED IN THE FACE OF THE WALL AND NO VOIDS WILL BE ALLOWED WITHIN THE WALL. VERTICAL JOINTS WILL BE STAGGERED AT LEAST 6".
JOINTS SHALL BE RACKED OUT AND POINTED WITH ONE PART CEMENT TO TWO PARTS SAND SO THAT THE FINISHED JOINT WILL BE RECESSED 1".
IF RUSTIC STONE IS USED MORTAR FOR POINTING WILL BE OF DARK CEMENT.

CEMENT CONCRETE WALL

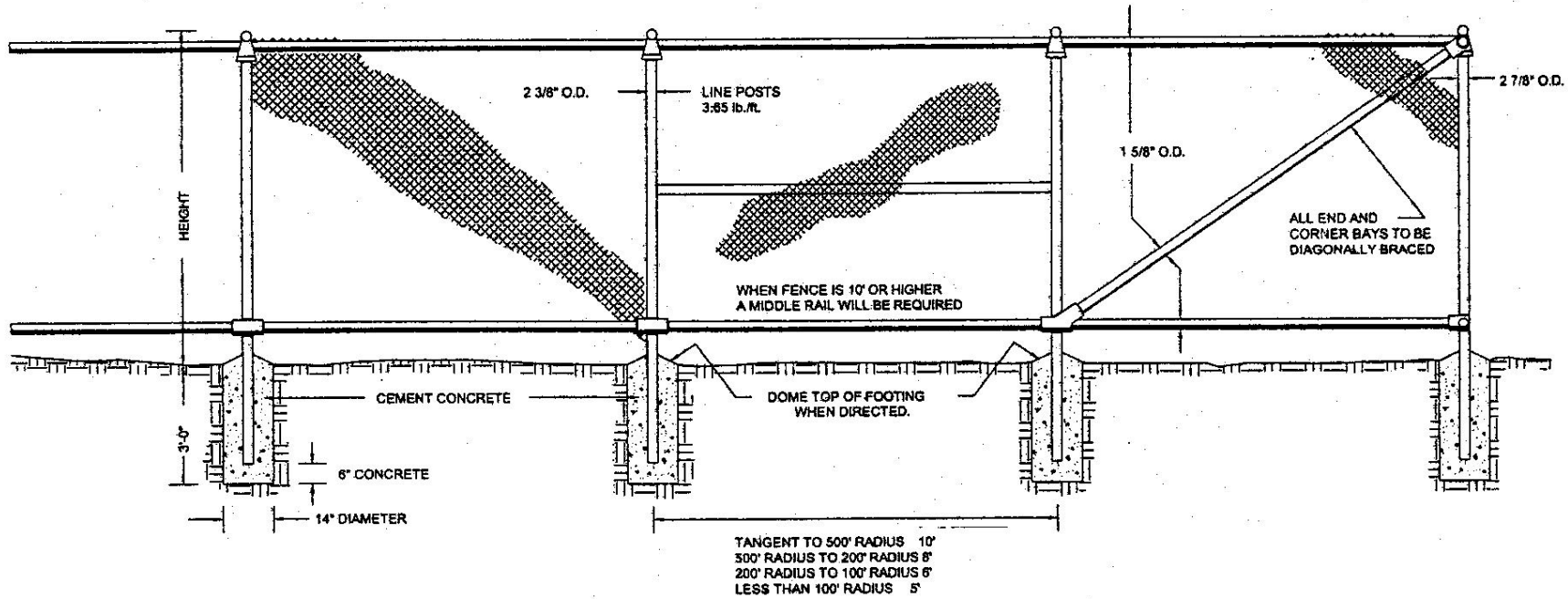

FABRIC: NO. 9 AMERICAN STANDARD WIRE GAUGE WOVEN IN A 2" MESH. HOT DIPPED GALVANIZED AFTER WEAVING OR ALUMINUM COATED OR VINYL CLAD STEEL WITH FULL 9 GAUGE CORE WIRE OR 6 GAUGE OVERALL. THE TOP AND BOTTOM OF THE FENCE SHALL BE KNUCKLED.

RAILS AND POSTS: HOT DIPPED GALVANIZED STEEL OR ACRYLIC COATED TO MATCH FABRIC COLOR ON VINYL CLAD FABRIC. GATE POST 4" O.D. AT 9.1 lbs./ft.. WHERE FENCE SURMOUNTS WALLS, POSTS ARE TO BE SET IN GALVANIZED METAL OR PVC SLEEVES (SEE PAGE 9 AND 13).

MISC. MATERIALS: HOT DIPPED GALVANIZED STEEL, ALUMINUM COATED OR VINYL CLAD STEEL (ALL NON-CORROSIVE).

58

WIRE FABRIC FENCE

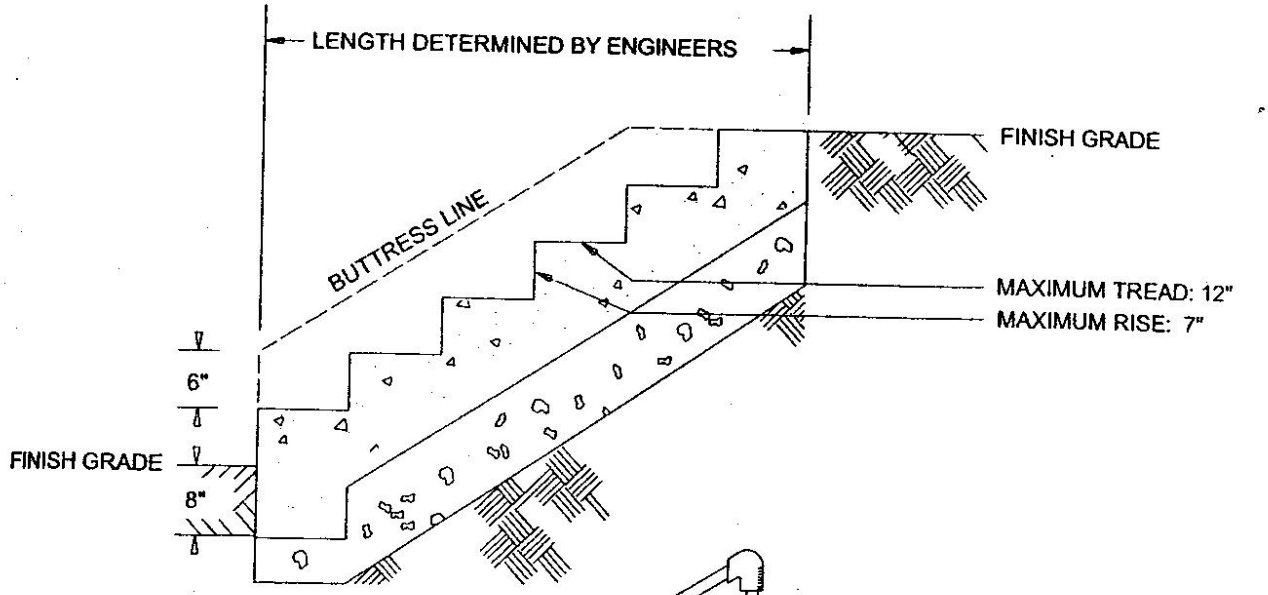

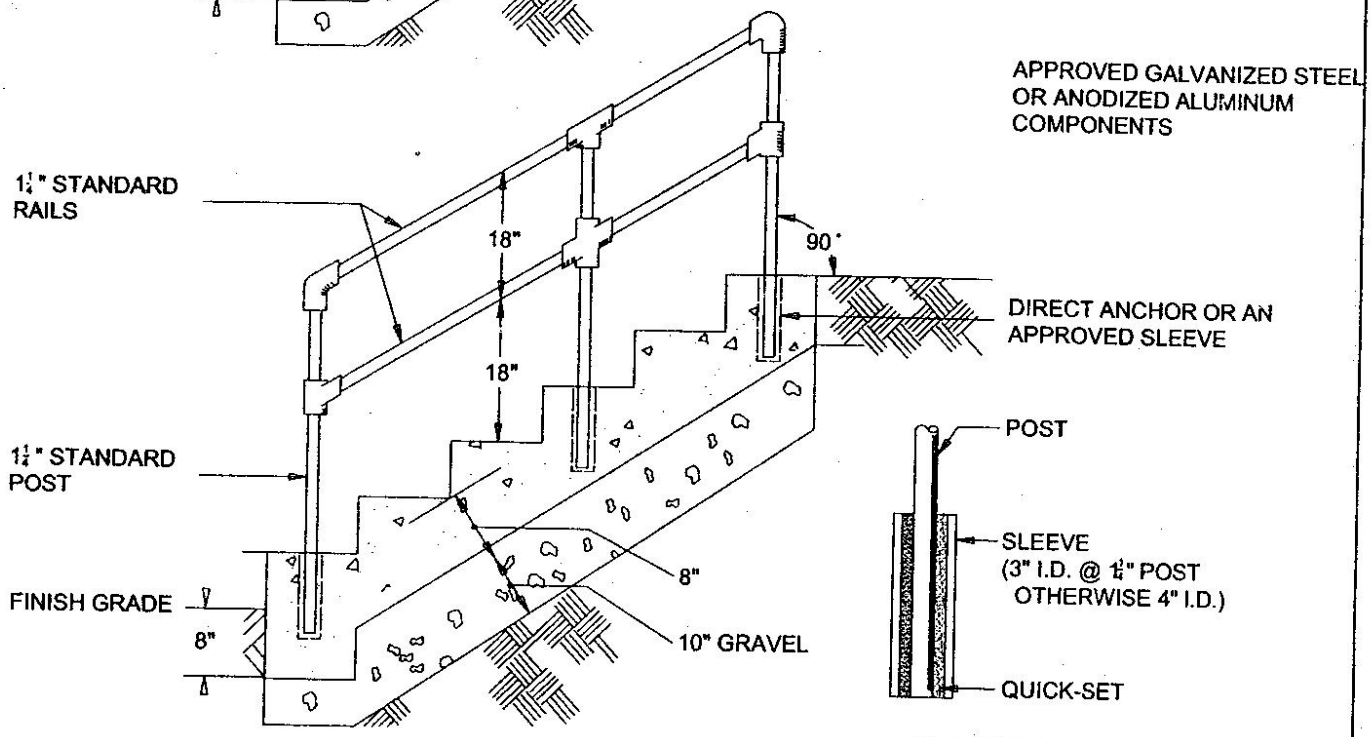

SLEEVE
(PVC OR GALVANIZED STEEL)

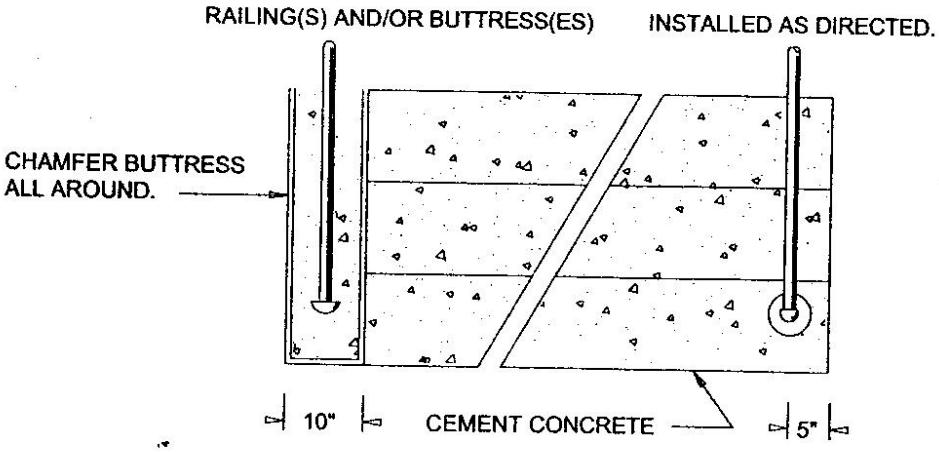

CONCRETE STAIRS

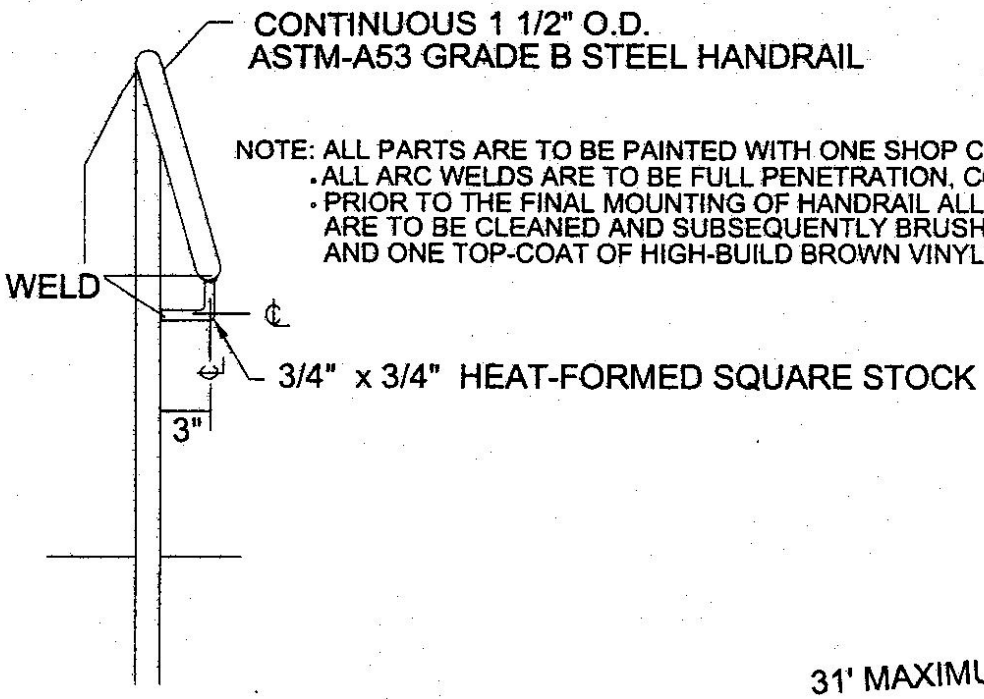

NOTE: ALL PARTS ARE TO BE PAINTED WITH ONE SHOP COAT OF PAINT PRIOR TO BEING ASSEMBLED AND/OR ARC WELDED.
- ALL ARC WELDS ARE TO BE FULL PENETRATION, CONTINUOUS, SUBSEQUENTLY GROUND SMOOTH, AND SHOP PAINTED.
- PRIOR TO THE FINAL MOUNTING OF HANDRAIL ALL METAL COMPONENTS ARE TO BE CLEANED AND SUBSEQUENTLY BRUSH-PAINTED WITH AN INTERMEDIATE COAT OF STRUCTURAL PRIMER AND ONE TOP-COAT OF HIGH-BUILD BROWN VINYL FINISH PAINT.

END VIEW DETAIL

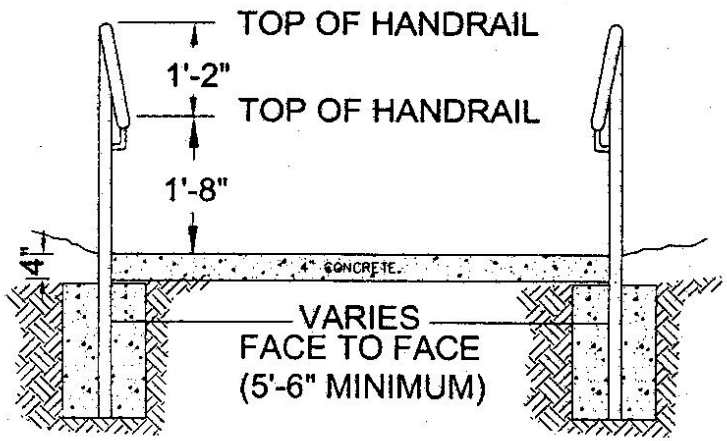

END VIEW

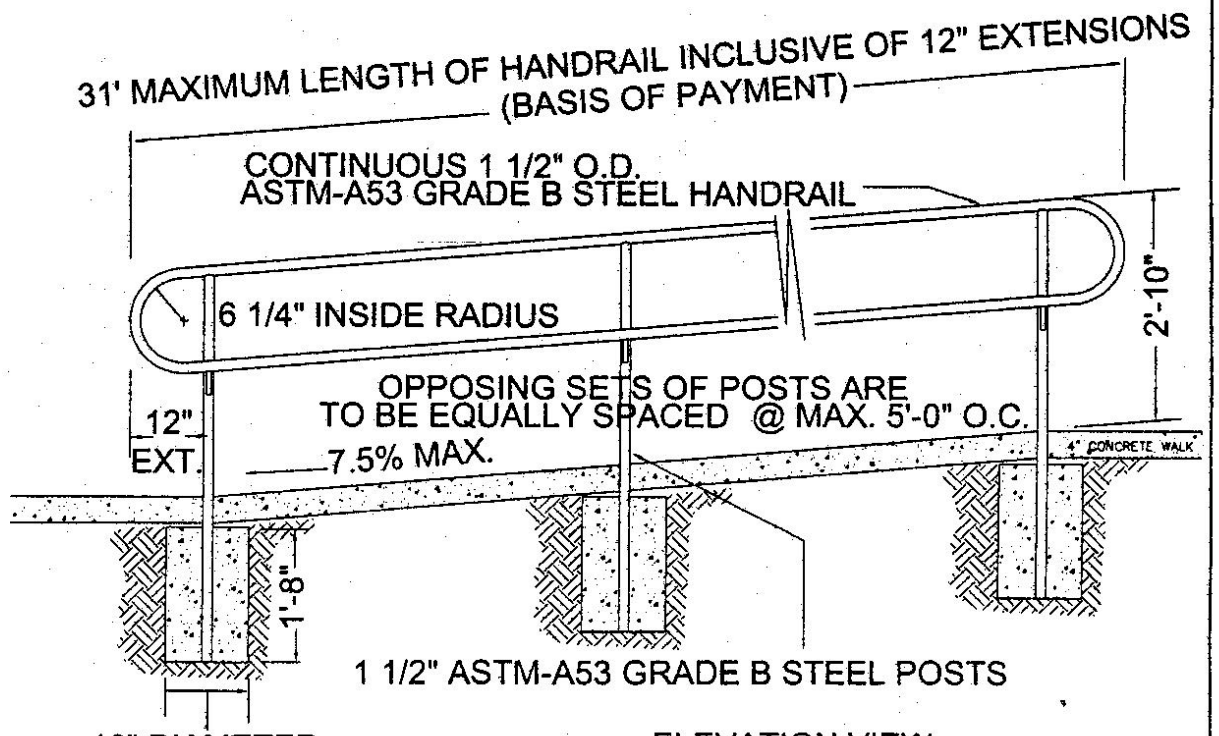

ELEVATION VIEW

60

TYPICAL STEEL POST/STEEL HANDRAIL SUPPORT FOR HANDICAP RAMPS

NOTE: ALL LUMBER TO BE PRESSURE TREATED SOUTHERN YELLOW PINE FINISHED ON FOUR SIDES (S4S). ENTIRE FENCE TO BE PAINTED WITH TWO COATS OF OUTSIDE WHITE.

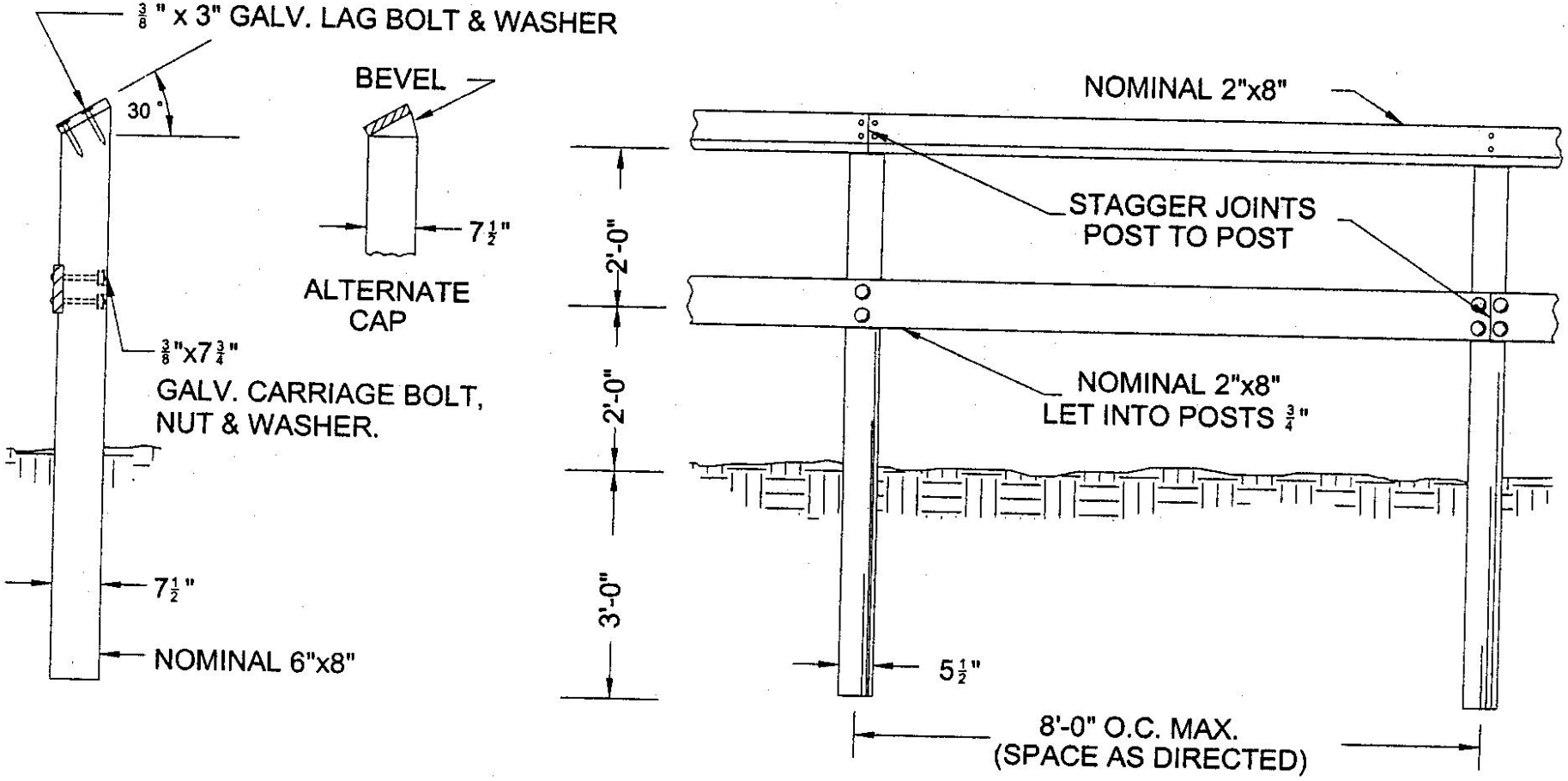

61

WOODEN BARRIER

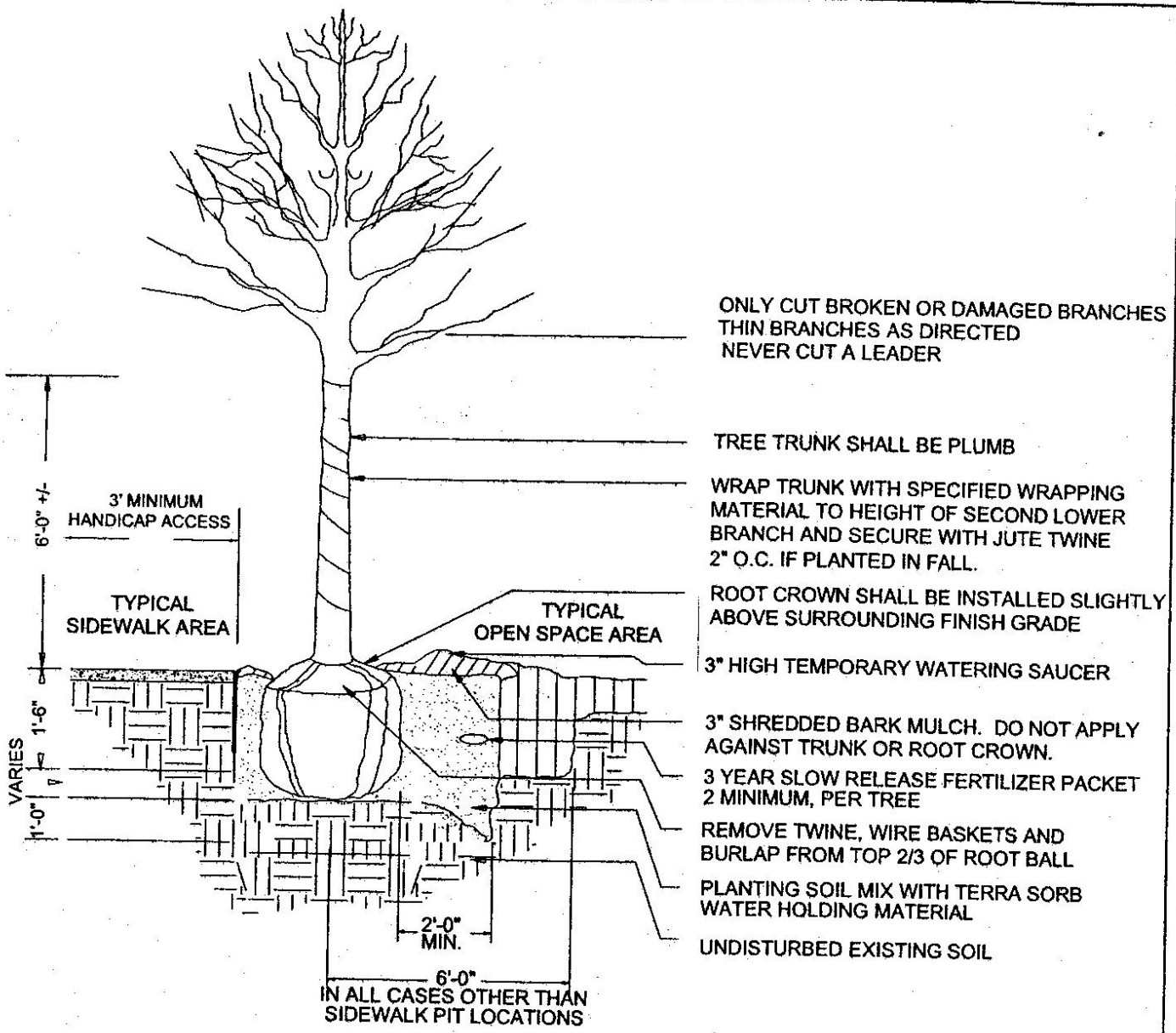

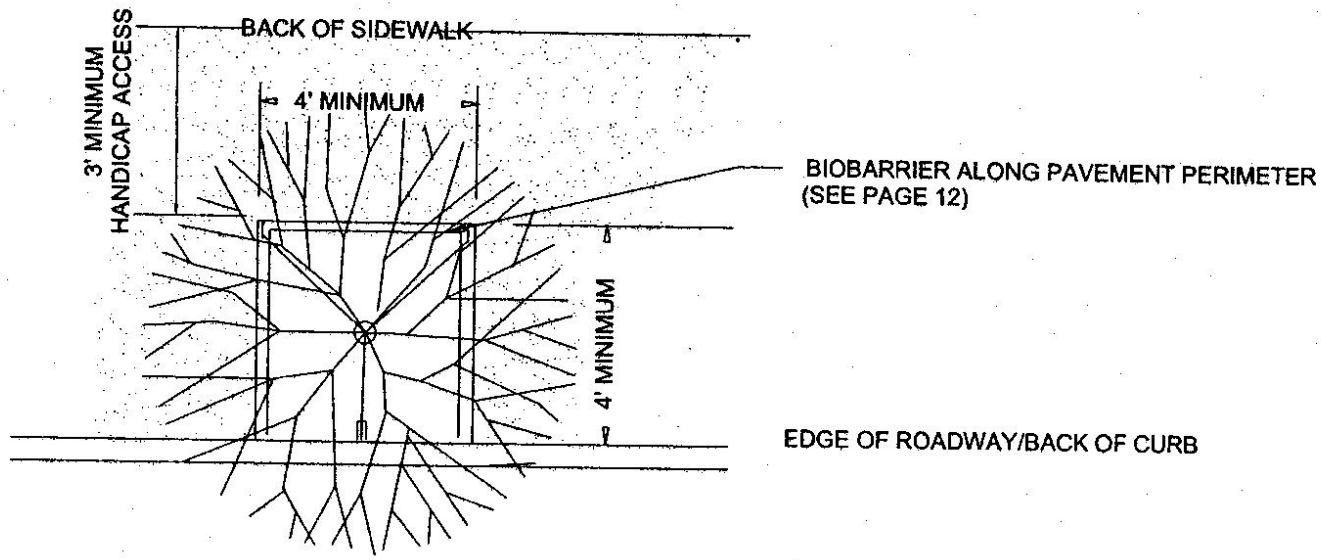

TYPICAL PLAN VIEW

(SIDEWALK AREA SHOWN)

TYPICAL TREE PLANTING DETAILS

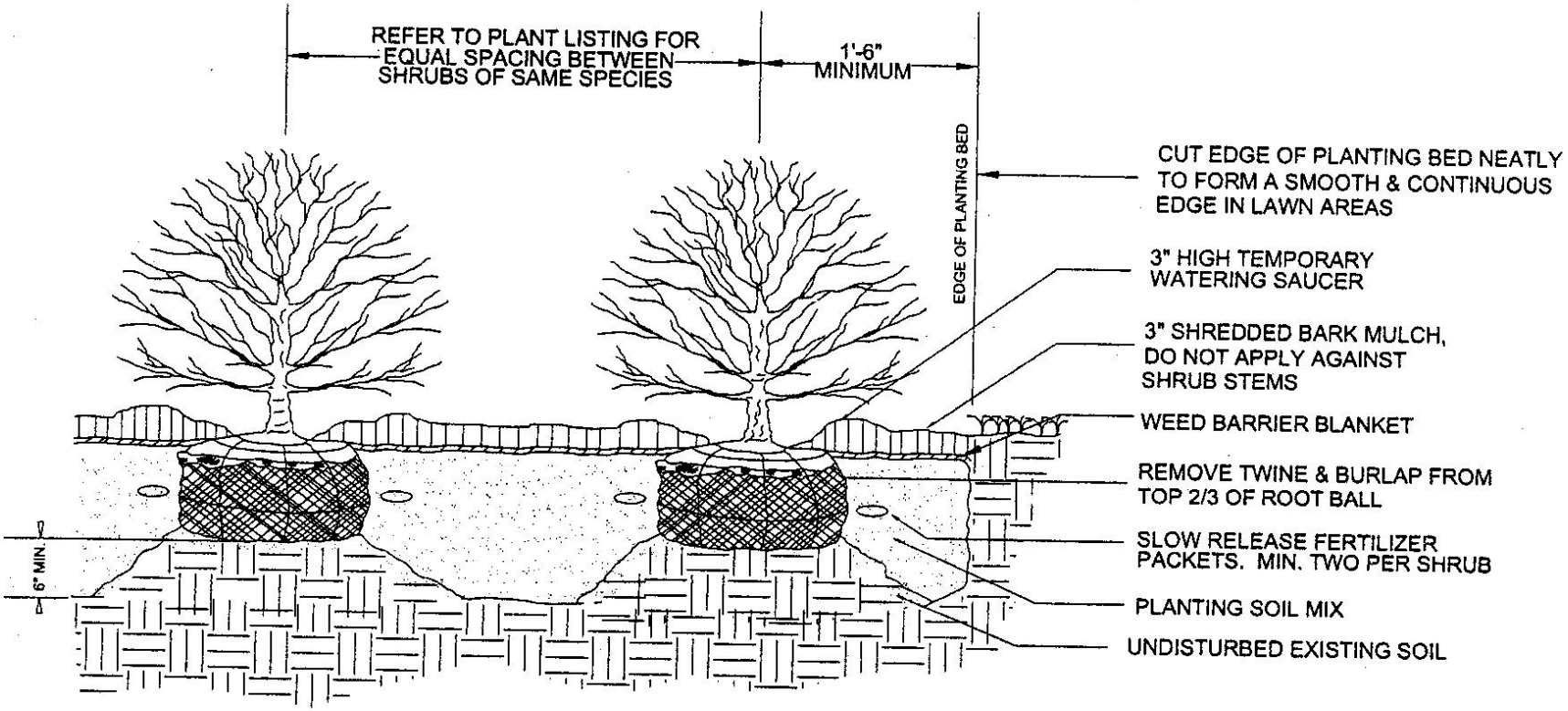

63

TYPICAL SHRUB PLANTING DETAILS

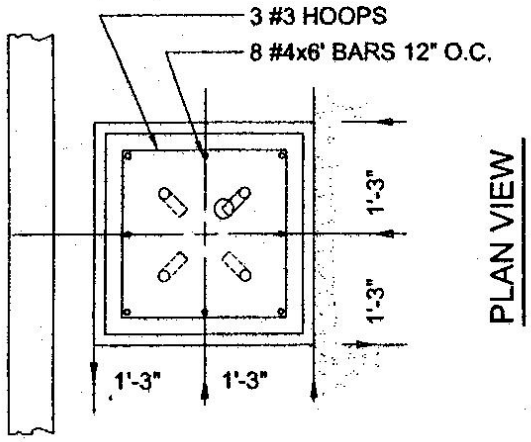

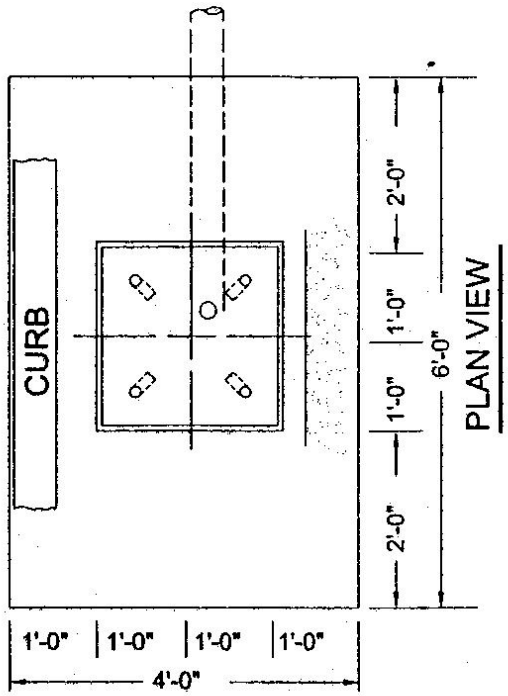

BOLTS: SIZE AND SPACING BY POLE MANUFACTURERS SPECIFICATIONS.

DUCT: 3" SCHEDULE 80 PVC WITH 'CAUTION' TAPE

OTHER: TOPS OF FOUNDATIONS ARE TO HAVE A 1" CHAMFER ALL AROUND.

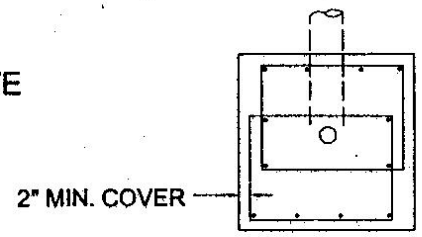

SECTION A-A

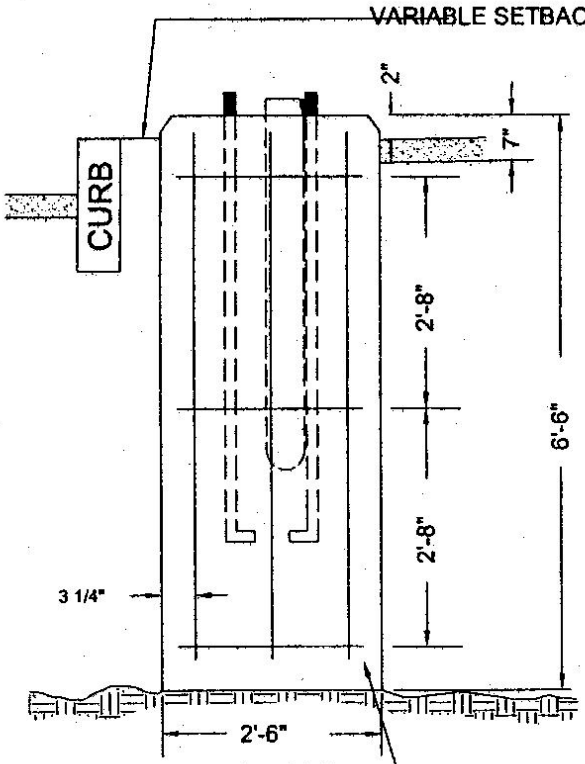

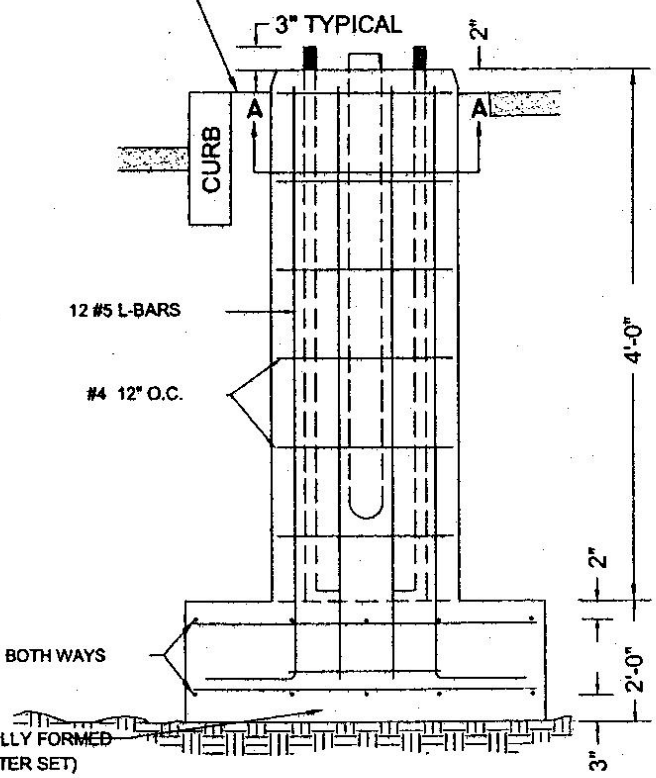

REINFORCED TRAFFIC SIGNAL MAST ARM FOUNDATIONS

(TYPE A) (TYPE B)

TYPICAL TRAFFIC SIGNAL MAST ARM FOUNDATION

BOLTS: SIZE AND SPACING BY
POLE MANUFACTURERS SPECIFICATIONS.

DUCT: 3" SCHEDULE 80 PVC
WITH 'CAUTION' TAPE

OTHER: TOPS OF FOUNDATIONS ARE TO HAVE
A 1" CHAMFER ALL AROUND.

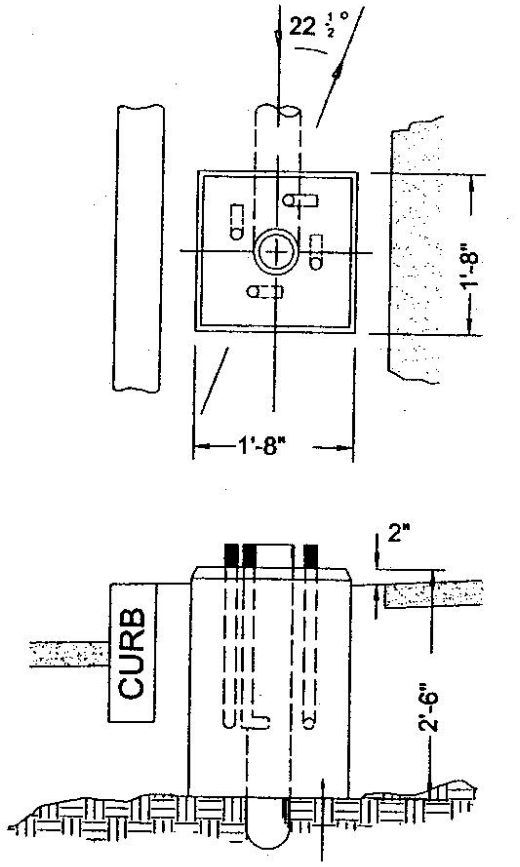

HANDHOLES ARE TO BE PROVIDED
ADJACENT TO ALL TRAFFIC SYSTEM COMPONENTS

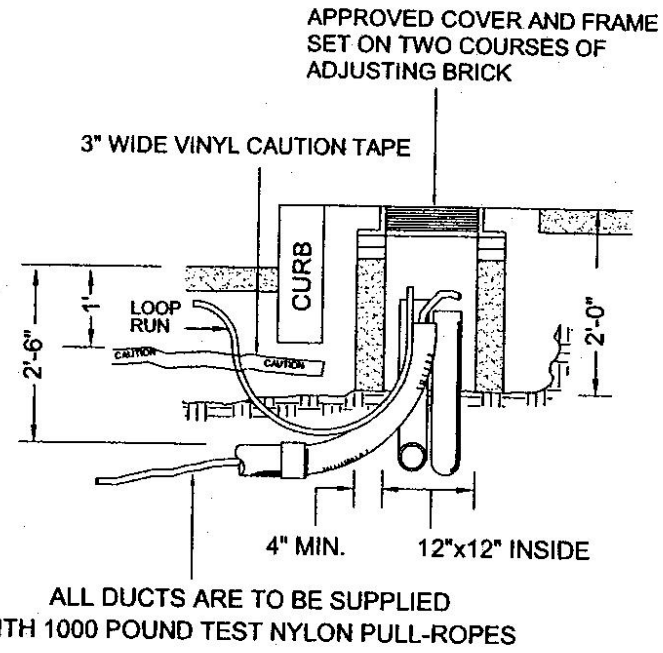

STANDARD TRAFFIC SIGNAL FOUNDATION

HAND-HOLE

TYPICAL TRAFFIC SIGNAL STANDARD FOUNDATION

TYPICAL TRAFFIC SIGNAL HAND HOLES

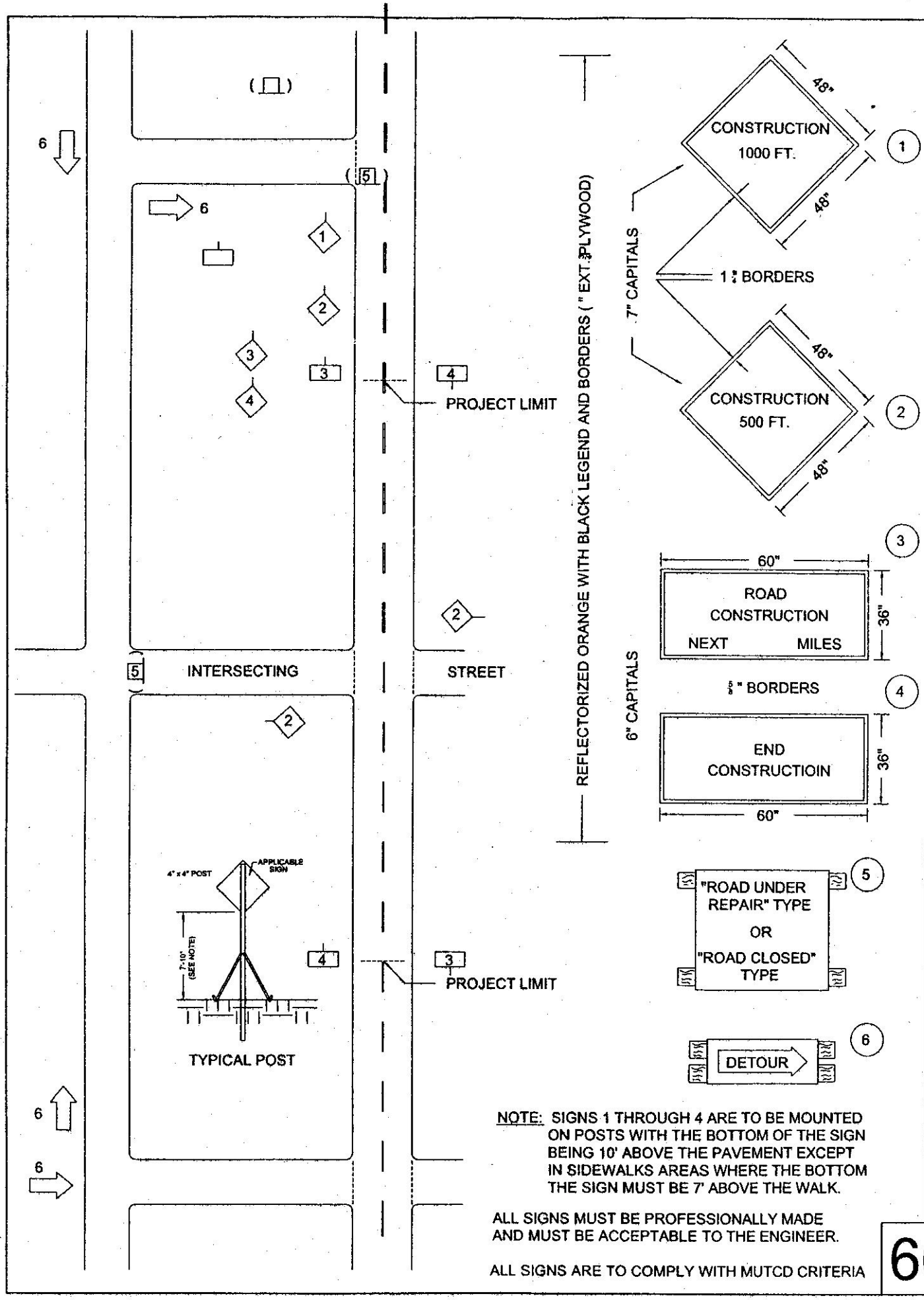

NOTE: SIGNS 1 THROUGH 4 ARE TO BE MOUNTED ON POSTS WITH THE BOTTOM OF THE SIGN BEING 10' ABOVE THE PAVEMENT EXCEPT IN SIDEWALKS AREAS WHERE THE BOTTOM THE SIGN MUST BE 7' ABOVE THE WALK.

ALL SIGNS MUST BE PROFESSIONALLY MADE AND MUST BE ACCEPTABLE TO THE ENGINEER.

ALL SIGNS ARE TO COMPLY WITH MUTCD CRITERIA

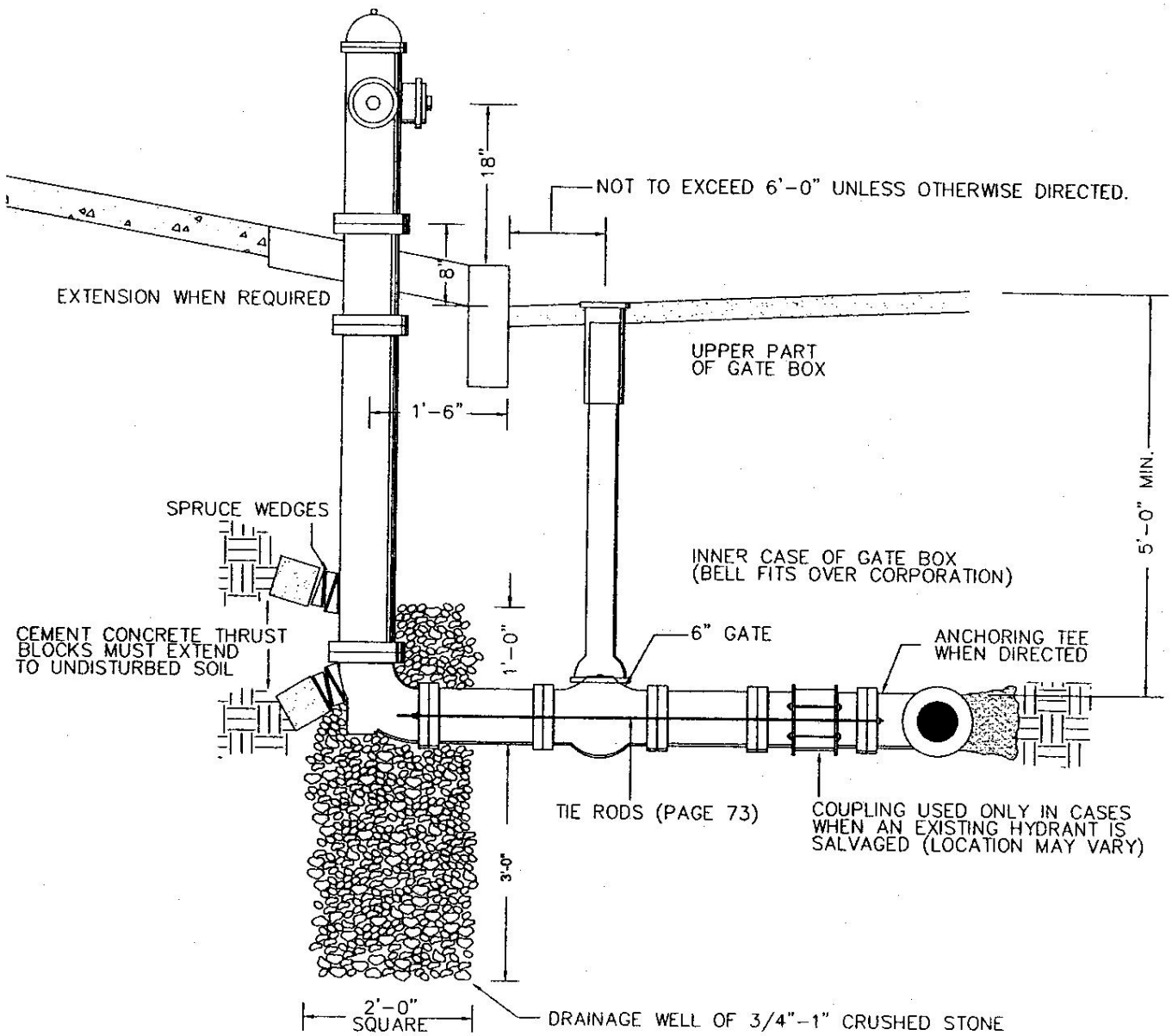

HYDRANT SCHEME

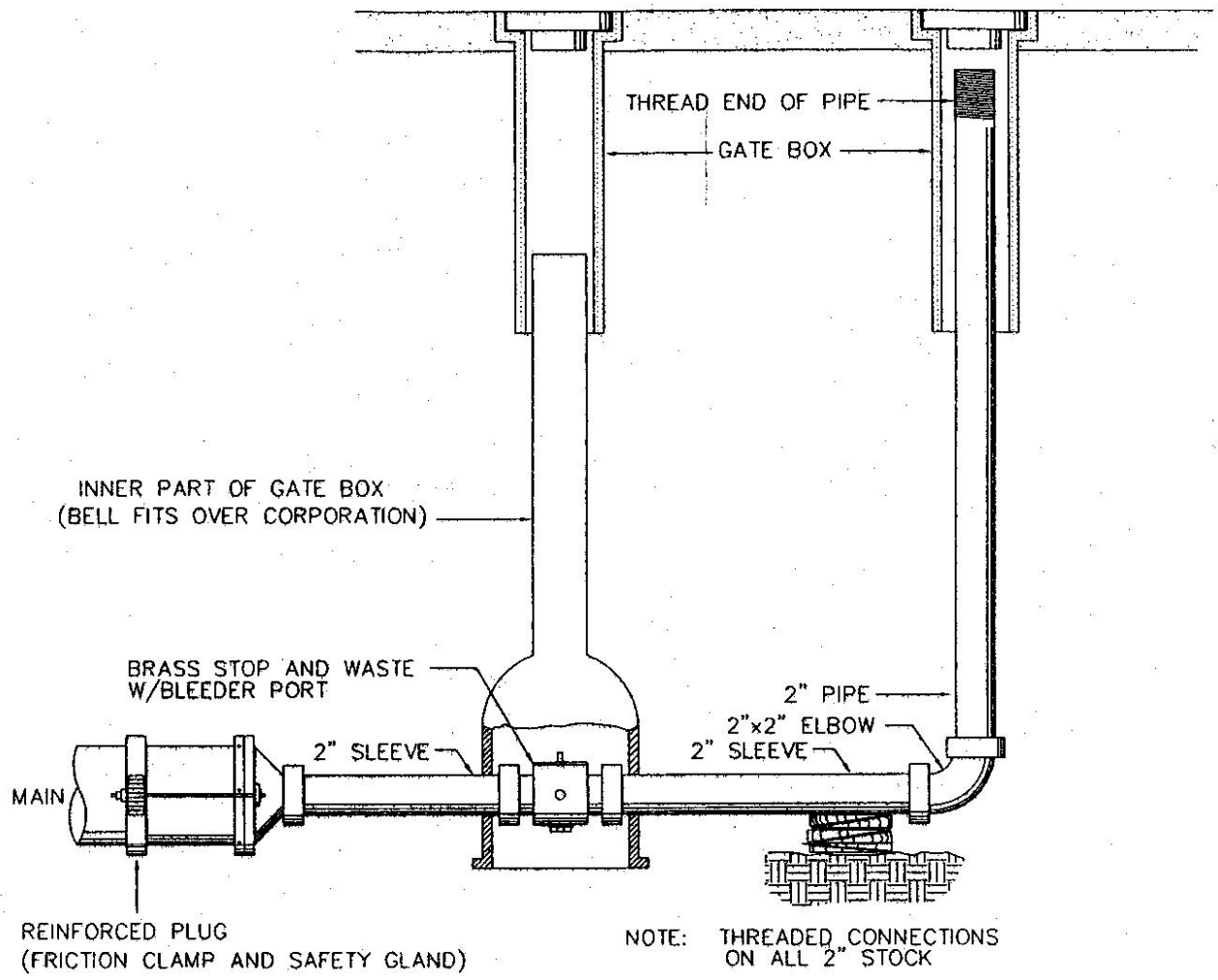

BLOWOFF ASSEMBLY

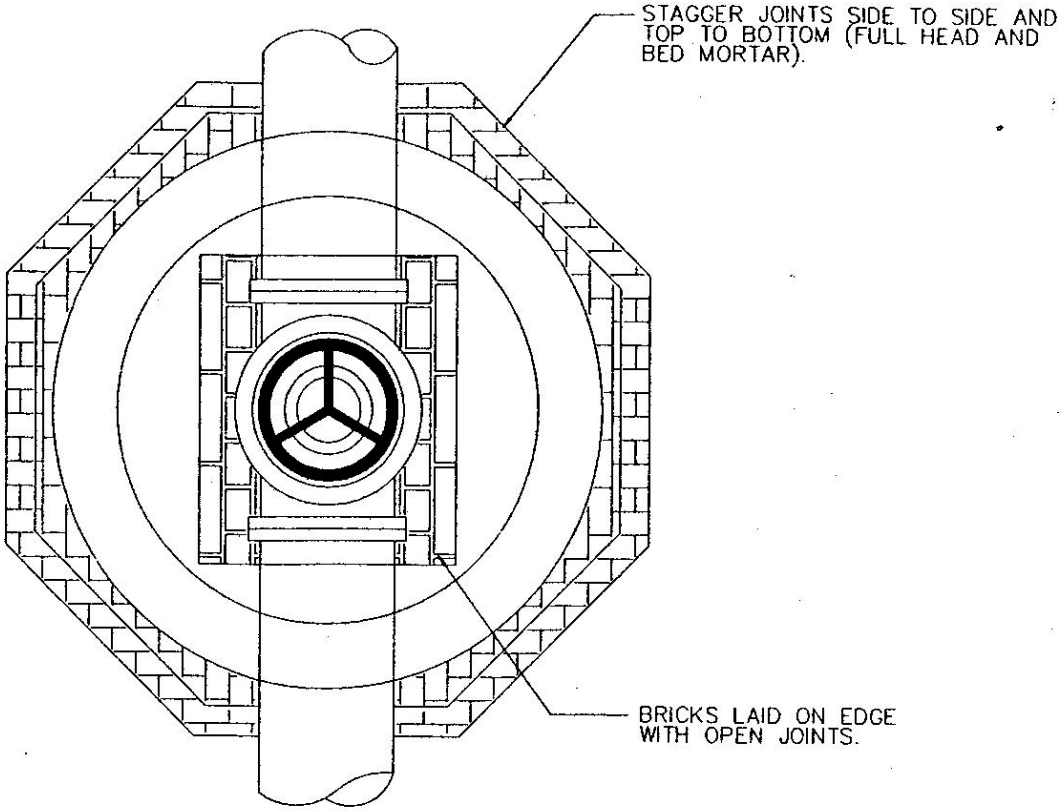

HEADER EVERY SEVENTH COURSE MANHOLE STEPS EVERY FIFTH COURSE FROM BOTTOM.

NOTE: 8" WIDE PRECAST CEMENT CONCRETE BLOCK OR APPROVED PRECAST CONCRETE MAY BE USED.

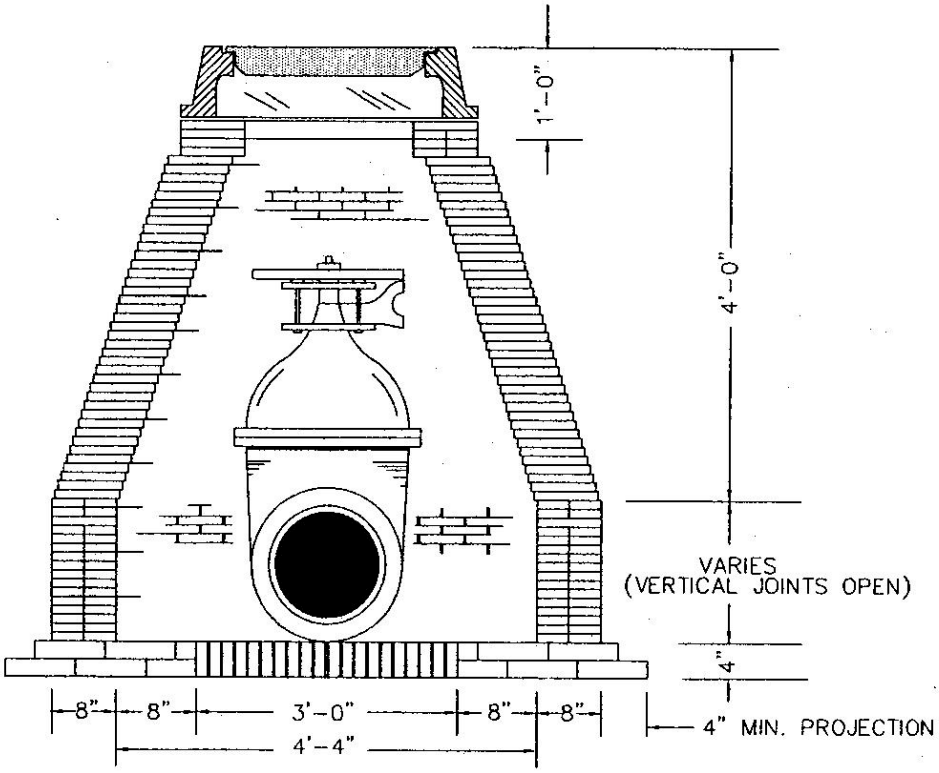

PAGE 34 APPLIES

VALVE CHAMBER FOR PIPE 12" AND UP

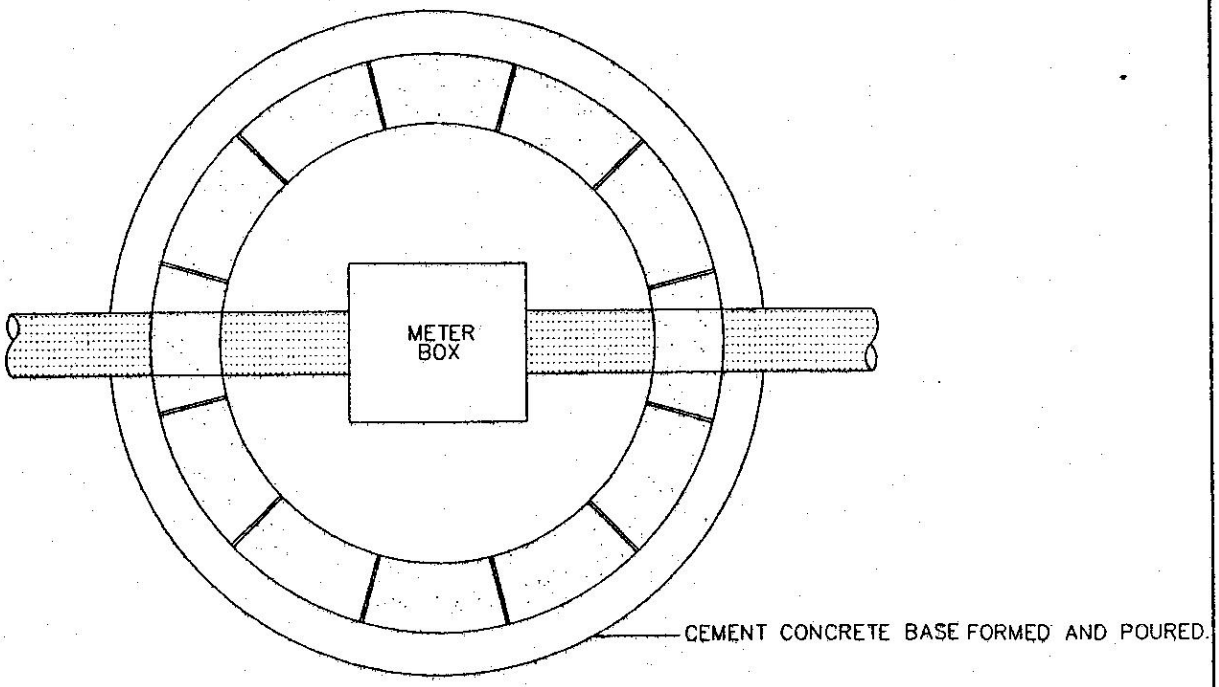

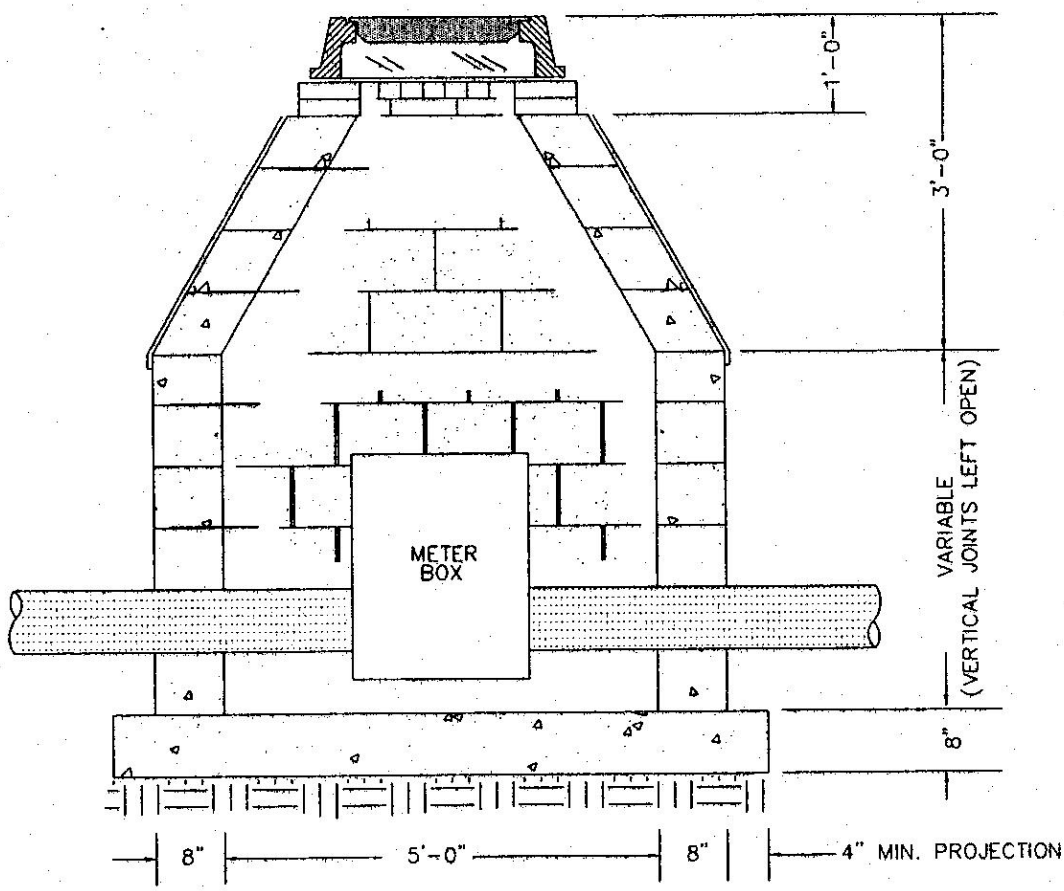

MANHOLE STEPS EVERY TWO COURSE FROM BOTTOM.
CEMENT CONCRETE BLOCK SHOWN. PRECAST CONCRETE AS APPROVED.

PAGE 34 APPLIES

WATER METER PIT

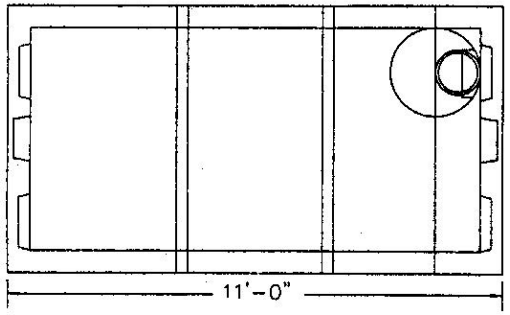

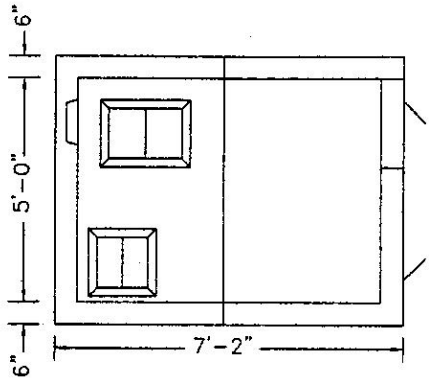

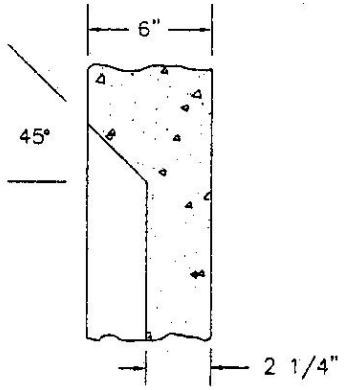

KNOCKOUT

5000 LB. CEMENT CONCRETE
TOTAL WEIGHT 21,800 LBS.
REINFORCEMENT: STEEL: GRADE 40 MIN. COVER 1" ASTM A-615 68 (NONE IN KNOCKOUT AREA)
LOADING: CONFORM TO AASHO-HS20-40

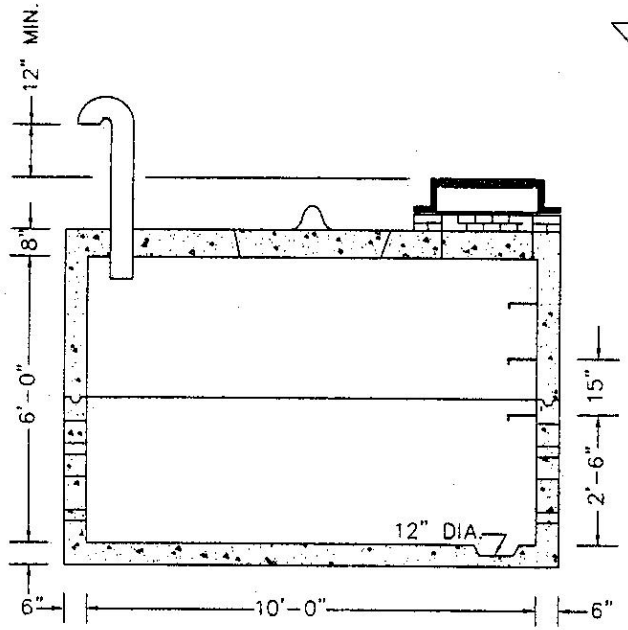

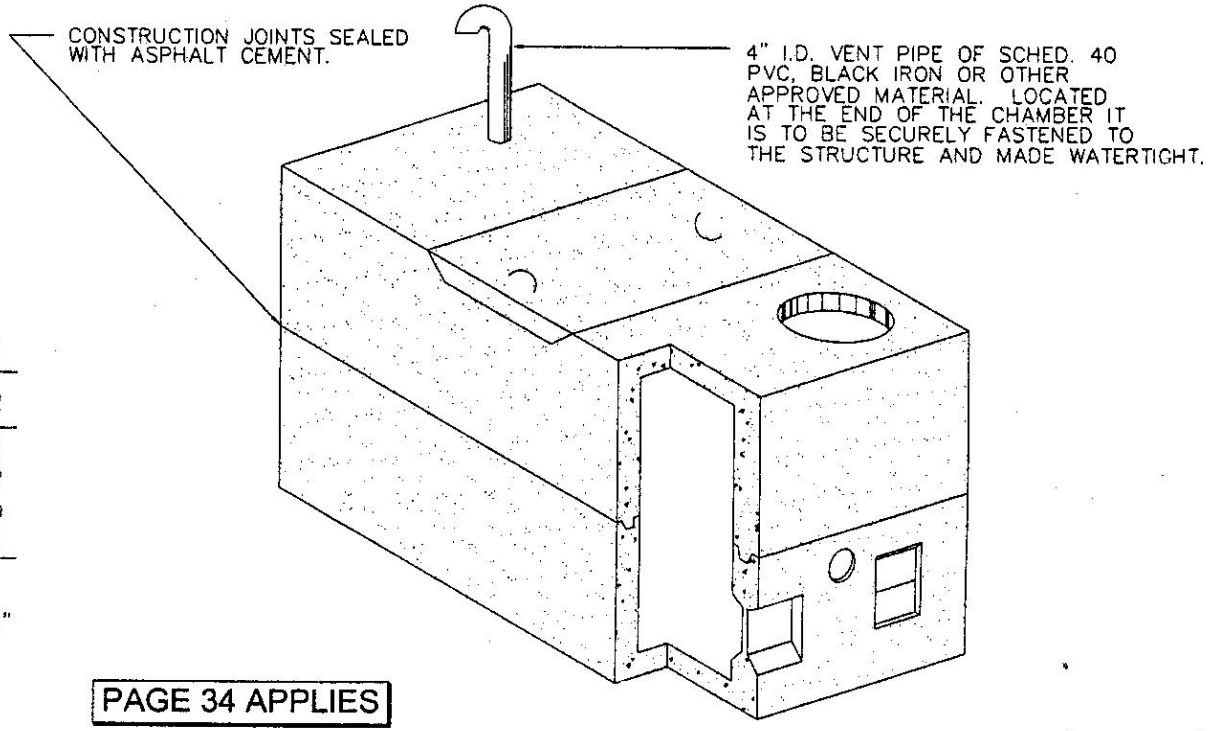

PAGE 34 APPLIES

PRECAST CONCRETE METER PIT

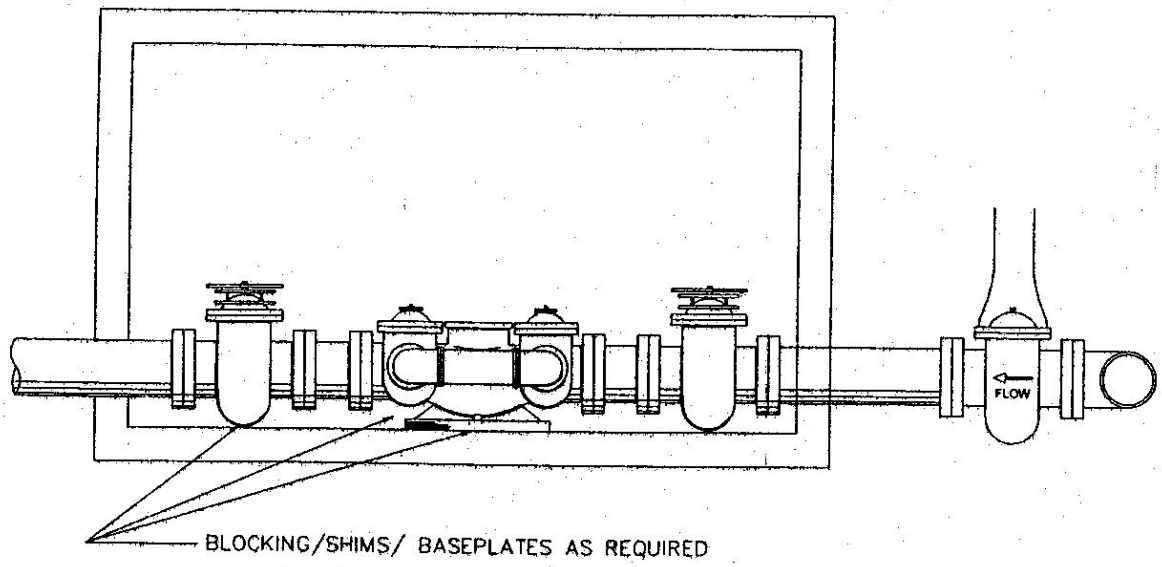

SIDE VIEW

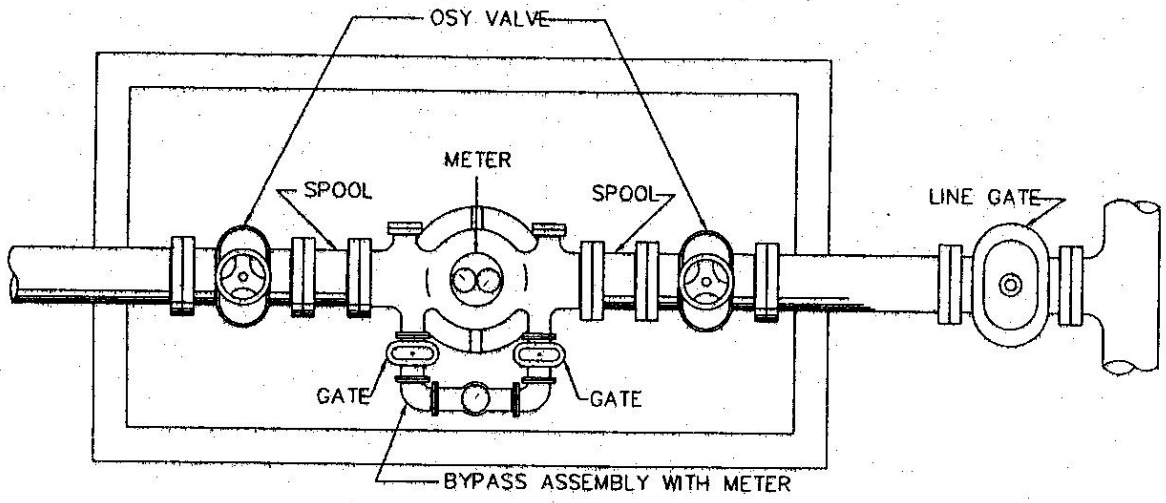

TOP VIEW

PRECAST CONCRETE METER PIT: SEE PAGE 71
ALL VALVES OPEN RIGHT
ALL COMPONENTS AND INSTALLATION SUBJECT TO THE APPROVAL OF THE CITY OF NEWTON

PAGE 34 APPLIES

METER PIT ASSEMBLY WITH BYPASS

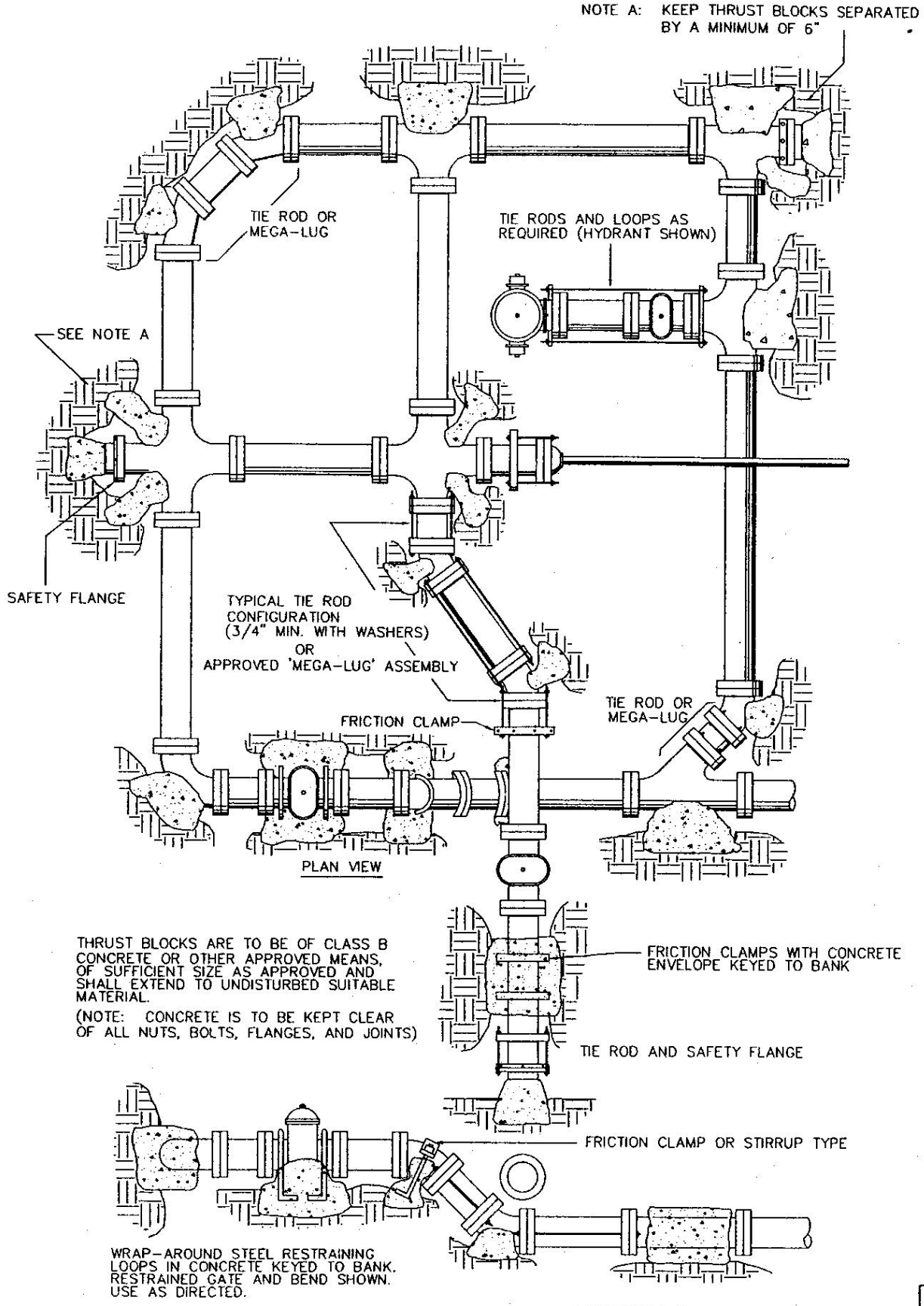

TYPICAL THRUST BLOCKS CONFIGURATIONS

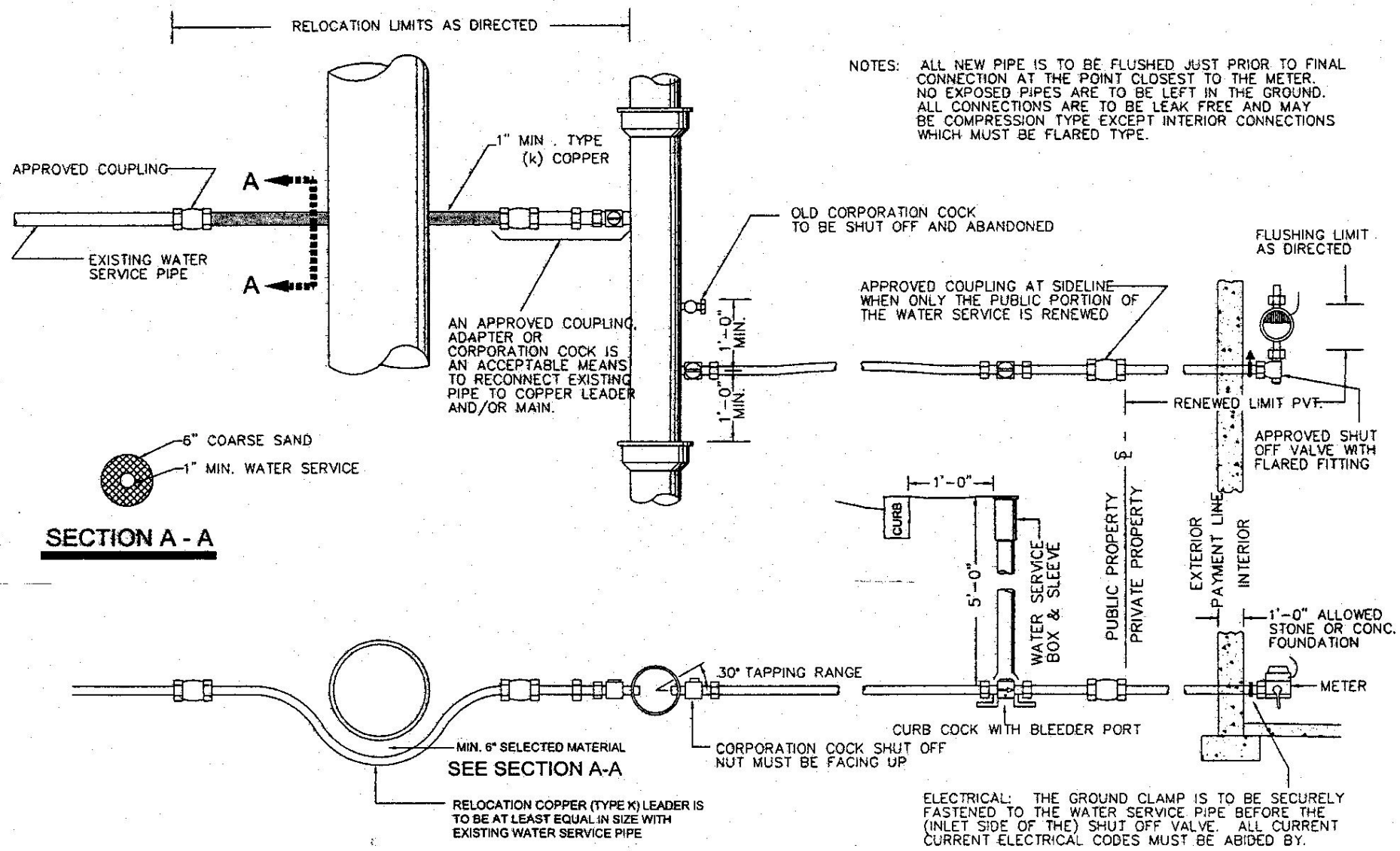

74

TYPICAL WATER SERVICE CONFIGURATIONS