75 PLEASANT ST GAS MAIN EXTENSION & SERVICE INSTALLATION
2" & 6" PL (L.P.)
(75) PLEASANT ST, TYLER TER, NEWTON, MA
W.O. NO.: 1502891

PIPE TOTALS			
DIAMETER	MATERIAL	ABANDONED	INSTALLED
6"	PL	--	75 LF
2"	PL	--	60 LF

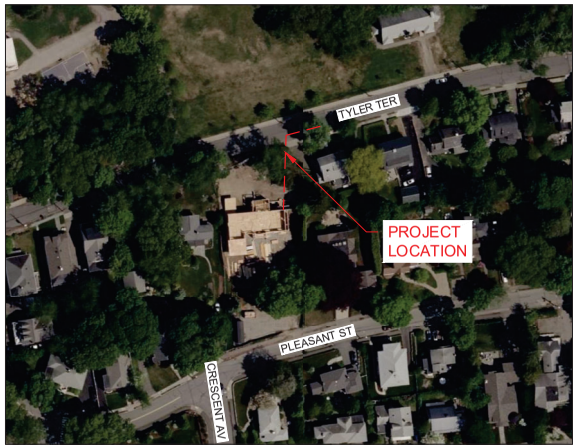

LOCATION MAP

LAT/LON: 42°19'54.5"N, 71°11'52.6"W
NEWTON, MA
SCALE: 1:300

INDEX OF SHEETS		
SHEET	NAME	TITLE
1	DDS-NEW-71220461 G-001	COVER - LOCATION MAP
2	DDS-NEW-71220461 G-002	CONSTRUCTION NOTES
3	DDS-NEW-71220461 G-003	CONSTRUCTION NOTES & BILL OF MATERIALS
4	DDS-NEW-71220461 C-001	OVERALL LAYOUT SHEET & TIE-IN DETAIL
5	DDS-NEW-71220461 C-201	STANDARD DETAILS
6	DDS-NEW-71220461 C-202	STANDARD DETAILS
7	DDS-NEW-71220461 C-203	STANDARD DETAILS

811 DigSafe MA·ME·NH·RI·VT

THE DDS COMPANIES
45 HENDRIX ROAD
WEST HENRIETTA, NY 14586
PHONE (585) 359-7540
FAX (585) 359-7541

BOSTON GAS COMPANY
d/b/a
nationalgrid
40 SYLVAN ROAD
WALTHAM, MA 02451

IFC

PE STAMP:
11/28/22
MARK E. PETROSKI
CIVIL
NO. 23
COMMONWEALTH OF MASSACHUSETTS

NO.	DESCRIPTION	DATE	DR.BY	CK.BY	APP.BY
B	REVISED BILL OF MATERIALS	01/09/2023	CJV	DMJ	MEP
A	ISSUED FOR CONSTRUCTION	11/29/2022	CJV	DMJ	MEP

75 PLEASANT ST
GAS MAIN EXTENSION
TYLER TER
NEWTON, MA

COVER - LOCATION MAP

DWG SIZE	DESIGNER	ENGINEER	DATE:	ASSET I.D.	W.O. NO.:
22"X34"	DDS COMPANIES	C. VARGAS	11/29/2022	XXXXXXXX	1502891

DRAWING NO.	SHEET NO.
G-001	01

SCOPE OF WORK:

NATIONAL GRID WORK ORDER NUMBER: 1502891

PROJECT NAME AND LOCATION: 75 PLEASANT ST, NEWTON, MA

PROJECT SCOPE:

- MAIN EXTENSION– INSTALL APRX. 75 FEET OF 6 INCH, LP PLASTIC MAIN EXTENDING FROM THE EXISTING 6 INCH, LP CAST IRON (1916) MAIN IN TYLER TER FOR NEW SERVICE AT #75 PLEASANT ST.
- SERVICE INSTALLATION– INSTALL APRX. 60 FEET OF 2 INCH, LP PLASTIC SERVICE AT #75 PLEASANT ST EXTENDING FROM THE NEW 6 INCH, LP PLASTIC MAIN EXTENSION.

1 MAIN CONNECTION

GENERAL CONSTRUCTION:

1. NO FIELD CHANGES SHALL BE MADE TO THIS PLAN WITHOUT APPROVAL OF ASSIGNED NATIONAL GRID PROJECT ENGINEER.
   ENGINEER: JONAS ILAIRE
   PHONE: (781) 402–4085
   EMAIL: JONAS.ILAIRE@NATIONALGRID.COM
2. NEW MAINS SHALL BE INSTALLED IN ACCORDANCE WITH THE TYPICAL TRENCH DETAIL INCLUDED IN THESE DRAWINGS, UNLESS NOTED OTHERWISE.
   A. 36 INCHES OF COVER FROM FINAL GRADE WHERE PRACTICAL
   B. STATE HIGHWAY MINIMUM COVER: 36 INCHES
   C. DISTRIBUTION MAIN MINIMUM COVER: 24 INCHES
   D. SAND PADDING IN ALL DIRECTIONS, 6 INCHES MINIMUM.
   E. CAUTION TAPE SHALL BE INCLUDED ONE FOOT BELOW GRADE.
3. SERVICES SHOULD BE INSTALLED WITH 24 INCHES OF COVER.
   A. MINIMUM IN PUBLIC ROW: 18 INCHES
   B. MINIMUM IN PRIVATE PROPERTY: 12 INCHES
   C. SAND PADDING IN ALL DIRECTIONS, 6 INCHES MINIMUM.
   D. CAUTION TAPE SHALL BE INCLUDED ONE FOOT BELOW GRADE.
4. REFER TO CNST–6030 FOR SHALLOW MAINS. PRIOR TO INSTALLING GAS MAINS WITH LESS THAN 24 INCHES OF COVER, COMPLETE REQUEST FOR WAIVER FORM AND CONTACT GAS PIPELINE SAFETY & COMPLIANCE FOR APPROVAL:
   A. JENNIFER GILLIS – (617) 594–5157 (MA EXCLUDING CAPE AND WEBSTER)
   B. LIEN GAUTHIER – (617) 438–9069 (MA EXCLUDING CAPE AND WEBSTER)
   C. IF A PROPOSED TOP TEE CONNECTION RESULTS IN A SHALLOW MAIN THAT CANNOT MEET THE WAIVER CRITERIA, A FULL TEE CONNECTION IS AN ACCEPTABLE ALTERNATIVE. A SPHERICAL TEE IS ONLY ACCEPTABLE WITH APPROVAL FROM NATIONAL GRID STRATEGIC ASSET AND SYSTEM PLANNING.
5. ALL MAINS SHOULD BE INSTALLED WITH A CLEARANCE OF 12 INCHES FROM OTHER FACILITIES.
   A. DISTRIBUTION MINIMUM CLEARANCE: 6 INCHES
   B. APPROPRIATE PROTECTIVE MEASURES SHALL BE USED TO PROTECT THE GAS FACILITY IF MINIMUMS CANNOT BE ATTAINED. APPROVAL IS REQUIRED BY GAS SYSTEMS ENGINEERING.
6. THE PIPE ALIGNMENT IS SHOWN FOR REFERENCE ONLY AS APPROXIMATELY 3 FEET FROM THE EXISTING MAIN (BASED ON AVAILABLE RECORD INFORMATION). THE ACTUAL ROUTE AND ALL VERTICAL AND HORIZONTAL OFFSETS ARE TO BE FIELD ROUTED WITHIN THE PUBLIC RIGHT–OF–WAY BASED ON THE ACTUAL LOCATION OF EXISTING UTILITIES. ADDITIONAL FITTINGS NOT SHOWN WILL BE REQUIRED.
   A. ELBOWS SHOWN ARE ASSUMED TO BE 45 DEGREES IN MOST APPLICATIONS. 90 DEGREE ELBOWS MAY BE NEEDED BASED ON FIELD CONDITIONS.
7. VALVES DEPICTED IN THE DESIGN ARE THE MINIMUM REQUIRED FOR SECTIONALIZING, ISOLATION, CRITICAL VALVES, AND/OR TO ACCOMMODATE TIE–INS. ADDITIONAL FULL PORT VALVES MAY BE ADDED TO ACCOMMODATE CONSTRUCTION.
   A. VALVES FOR BRANCHES AT INTERSECTIONS SHOULD BE FIELD LOCATED JUST OUTSIDE OF THE INTERSECTION WHERE EASILY ACCESSIBLE, PRIOR TO THE FIRST SERVICE.
8. ELECTROFUSION COUPLINGS MAY BE INTERCHANGED WITH BUTT FUSION WHERE APPLICABLE.
9. TIE–IN LOCATIONS MAY VARY UP TO 100 FEET OF THE PROPOSED LOCATION TO ACCOMMODATE CONSTRUCTION, EXCEPT FOR WHEN THE FOLLOWING CONDITIONS APPLY:
   A. REGULATOR STATION WITHIN THE SCOPE OF THE JOB OR WITHIN 200 FEET OF THE TIE–IN LOCATION.
   B. CHANGE TO THE NUMBER OF CONNECTIONS (ADDITIONAL ADDED FROM AN INTERSECTION OR OTHERWISE).
   C. MATERIAL/SIZE CHANGE AT NEW LOCATION.
10. NOT ALL BYPASSES, GAUGES, PURGES AND OTHER MISCELLANEOUS FITTINGS ARE SHOWN. CONSTRUCTION SHALL INSTALL THESE FITTINGS AS NEEDED IN ACCORDANCE WITH THE APPROVED SOP.
11. WHEN CONNECTING NEW 'DEAD' MAIN TO NEW 'DEAD' MAIN: AS LONG AS THE CONNECTION BRANCH SIZE SHOWN IN THE DRAWINGS CAN BE ACHIEVED, THE FOLLOWING CONNECTION TYPES ARE ACCEPTED AND INTERCHANGEABLE:
    A. INLINE TEE
    B. PLASTIC HIGH VOLUME TAPPING TEE (2" BRANCH SIZE OR LESS)
    C. PLASTIC BRANCH SADDLE (WITH MAIN CUTTER SIZE SHOWN IN NATIONAL GRID POLICIES)
    D. STEEL THREE–WAY TEE (WITH MAIN CUTTER SIZE SHOWN IN NATIONAL GRID POLICIES)
12. THE LIVE MAIN CONNECTION DETAIL SHOWN IN THE DRAWINGS SHALL BE FOLLOWED. ANY CHANGES TO THE TIE IN CONNECTION TYPE SHALL BE APPROVED BY THE NATIONAL GRID ENGINEER PRIOR TO CONSTRUCTION.
13. WHEN RELAYING A LOWER PRESSURE MAIN WITH A HIGHER PRESSURE MAIN, ALL SERVICES SHALL BE RELAYED OR INSERTED.
14. PIPE AND FITTING QUANTITY DESCRIBED IN SCOPE MAY VARY FROM AMOUNTS SHOWN ON THE BILL OF MATERIALS TO ACCOMMODATE FIELD CONDITIONS AND CONSTRUCTION.
15. CONTRACTOR TO REFER TO NATIONAL GRID SERVICE RECORD INFORMATION, ASSOCIATED CONSTRUCTION STANDARDS AND NATIONAL GRID INSTRUCTION FOR ALL SERVICE WORK WITHIN THE SCOPE OF LIMITS OF THIS PROJECT.
16. ANY FITTINGS (SUCH AS BUT NOT LIMITED TO, PURGES, VENTS & GAUGES) WHICH ARE REPRESENTED ON THESE PLANS AND DETAILS WITHOUT AN ASSOCIATED PART ON THE BILL OF MATERIALS ARE TO BE SIZED AND SELECTED PER CURRENT NATIONAL GRID STANDARDS BY THE CONTRACTOR.
17. THE CONTRACTOR SHALL CALL DIG–SAFE (DIAL 811) OR 888–344–7233 AT LEAST 72 HOURS PRIOR TO CONSTRUCTION. SATURDAYS, SUNDAYS AND HOLIDAYS ARE EXCLUDED.
18. CONTRACTOR SHALL VERIFY THE LOCATION OF ALL UTILITIES AND STRUCTURES DEPICTED OR NOT DEPICTED ON THIS PLAN PRIOR TO COMMENCEMENT OF CONSTRUCTION. IT IS THE RESPONSIBILITY OF THE CONTRACTOR TO PHYSICALLY LOCATE ON–SITE UTILITIES THROUGH TEST PIT EXCAVATION OF SAID UTILITIES W/ PRIOR AUTHORIZATION FROM UTILITY OWNER.
19. NOTIFY NATIONAL GRID I&R IF THE PROJECT IS WITHIN 200 FEET OF A REGULATOR STATION.
20. DIMENSIONS SHOWN ILLUSTRATE THE INTENT OF MAIN PLACEMENT. SLIGHT VARIATIONS ARE EXPECTED. ANY SIGNIFICANT CHANGE NEEDS TO BE BROUGHT TO THE OWNERS (NATIONAL GRID) ATTENTION PRIOR TO PLACEMENT.
21. CONTRACTOR TO VERIFY PRESSURE AND GAS FEED DIRECTION OF EXISTING MAINS, NEW MAINS, AND MAINS TO BE ABANDONED PRIOR TO ANY AND ALL TIE INS BEING PERFORMED.
22. LOCATION OF ANY IDENTIFIED UNDERGROUND UTILITIES IS APPROXIMATE ONLY, AND IS NOT WARRANTED TO BE CORRECT. ADDITIONAL UTILITIES MAY EXIST WHICH ARE NOT INDICATED ON THESE PLANS. ALL EXISTING UTILITIES SHALL BE VERIFIED BY THE CONTRACTOR FOR SERVICE, SIZE, INVERT ELEVATIONS, LOCATION, ETC.
23. THE CONTRACTOR SHALL PROTECT AND MAINTAIN DIG SAFE FIELD MARKS, ANY EXISTING PROPERTY LINE MONUMENTATION OR OTHER EXISTING SURVEY STAKES OR FIELD MARKS. THE CONTRACTOR SHALL REPLACE AT THEIR EXPENSE ANYTHING DISTURBED OR DESTROYED.
24. THE CONTRACTOR SHALL COMPLETE MISCELLANEOUS WORK NOT SPECIFICALLY SHOWN ON THE CONTRACT DRAWINGS SUCH AS PAVEMENT PATCHING, TRENCH & EQUIPMENT BLOCKING, TREE TRIMMING, ETC.
25. ANY SUBSURFACE UTILITIES, STRUCTURES AND/OR FIXED OBJECTS SHOWN AT, BELOW OR ABOVE GRADE SHOWN ON THESE PLANS HAVE BEEN PLACED BASED ON AVAILABLE RECORD MAPPING, AERIAL IMAGERY AND OTHER DESIGN RESOURCES. CONTRACTOR IS WARNED THAT EXACT OR APPROXIMATE LOCATION OF SUBSURFACE UTILITIES, STRUCTURES AND/OR FIXED OBJECTS SHOWN AT, BELOW OR ABOVE GRADE IN THE PROJECT AREA MAY DIFFER FROM THAT SHOWN OR MAY NOT BE SHOWN. IT IS THE CONTRACTORS RESPONSIBILITY TO PERFORM FIELD VERIFICATION PRIOR TO EXECUTING ANY WORK.
26. ALL TRENCH EXCAVATION AND ANY REQUIRED SHEETING AND SHORING SHALL BE DONE IN ACCORDANCE WITH THE LATEST NATIONAL GRID, APPLICABLE STATE DOT AND LOCAL MUNICIPAL STANDARDS.
27. CONTRACTOR SHALL MAINTAIN ALL TRAFFIC IN ALL AREAS IN ACCORDANCE WITH THE LATEST EDITION OF THE MANUAL OF UNIFORM TRAFFIC CONTROL DEVICES.
28. ALL NECESSARY PRECAUTION FOR THE SAFETY OF THE PUBLIC SHALL BE TAKEN. ALL BARRIERS, WARNING LIGHTS AND OTHER DEVICES AND EQUIPMENT REQUIRED BY FEDERAL, STATE AND LOCAL AUTHORITIES SHALL BE MAINTAINED.
29. CONTRACTOR SHALL TAKE CARE TO PREVENT DAMAGE TO ALL OTHER EXISTING UTILITIES. DAMAGED UTILITIES SHALL BE IMMEDIATELY REPAIRED BY CONTRACTOR AT THE CONTRACTOR'S EXPENSE.
30. CONTRACTOR MAY INSTALL ADDITIONAL VALVES NOT SHOWN IN THE PLANS IF DEEMED NECESSARY IN THE FIELD. NEW VALVES ASSOCIATED WITH TIE INS (SEE DETAILS ON SHEET 04) MUST BE INSTALLED PER THE DETAIL. FINAL LOCATION OF THE NEW VALVES IS TO BE DETERMINED IN THE FIELD BY THE CONTRACTOR. ANY SIGNIFICANT CHANGE MUST BE BROUGHT TO THE OWNERS (NATIONAL GRID) ATTENTION PRIOR TO INSTALLATION.
31. THE CONTRACTOR SHALL BE RESPONSIBLE FOR ACQUAINTING WITH THE CONDITIONS FOR THE SITE AND FOR ESTIMATING PROPERLY THE DIFFICULTY AND COST TO SUCCESSFULLY PERFORM THE WORK.
32. NATIONAL GRID RESERVES THE RIGHT TO EXAMINE ANY WORK DONE ON THIS PROJECT AT ANY TIME TO DETERMINE THE CONFORMANCE WITH THE REQUIREMENTS OF THE CONTRACT DOCUMENTS OF THIS PROJECT, AS INTENDED AND INTERPRETED BY NATIONAL GRID.

DESIGN CRITERIA:

1. DESIGN IN ACCORDANCE WITH THE FOLLOWING:
   A. ENG02001: DESIGN OF GAS SERVICES
   B. ENG04001: DESIGN OF DISTRIBUTION MAINS
   C. ENG04010: DESIGN REQUIREMENTS FOR INSTALLATION OF CASINGS
2. PROPOSED PIPING:
   A. DESIGN CLASS LOCATION: 4
   B. NOMINAL SIZE: 2 & 6 INCH
   C. MATERIAL: MDPE
   D. MAOP: L.P.
3. PIPE SIZE DETERMINED BY NATIONAL GRID STRATEGIC ASSET AND SYSTEM PLANNING

SEQUENCE OF CONSTRUCTION:

1. CONTRACTOR SHALL CALL DIGSAFE (DIAL 811 OR 888–344–7233) AT LEAST 72 HOURS PRIOR TO CONSTRUCTION. SATURDAYS, SUNDAYS, AND HOLIDAYS ARE EXCLUDED.
2. CONTRACTOR SHALL VERIFY THE LOCATION OF ALL UTILITIES AND STRUCTURES DEPICTED OR NOT DEPICTED ON THIS DESIGN PRIOR TO CONSTRUCTION.
3. INSTALL MAIN AS INDICATED IN SCOPE OF WORK.
4. INSTALL SERVICE AS INDICATED IN SCOPE OF WORK.
5. PRESSURE TEST (SEE PRESSURE TESTING SECTION).
6. MAKE CONNECTION IN DETAIL A.
7. PURGE NEW MAIN INTO SERVICE.
8. PURGE NEW SERVICE INTO SERVICE.
9. PERFORM RESTORATION.

CODES & STANDARDS

1. WORK SHALL CONFORM TO ALL LOCAL, STATE, AND FEDERAL CODES IN ADDITION TO NATIONAL GRID GAS POLICIES AND WORK METHODS. WHERE ANY CONFLICTS OF CODES, STANDARDS AND REGULATIONS MAY EXIST, THE MORE STRINGENT CODE, STANDARD, OR REGULATION SHALL APPLY.
2. ALL REFERENCES SHALL BE IN ACCORDANCE WITH THE MOST CURRENT REVISION AVAILABLE AT THE TIME OF CONSTRUCTION.
3. FEDERAL & STATE:
   A. TITLE 49: PART 192 TRANSPORTATION OF NATURAL AND OTHER GAS BY PIPELINE: MINIMUM FEDERAL SAFETY STANDARDS
   B. 220 CMR: DEPARTMENT OF PUBLIC UTILITIES
      100.00 – 113.00: MASSACHUSETTS GAS DISTRIBUTION CODE
   C. AMERICAN SOCIETY OF MECHANICAL ENGINEERS
      B31.8: GAS TRANSMISSION AND DISTRIBUTION PIPING SYSTEMS
   D. 248 CMR 4–7: MA FUEL GAS CODE
4. CONSTRUCTION SHALL BE PERFORMED IN ACCORDANCE WITH NATIONAL GRID GAS POLICIES AND WORK METHODS, INCLUDING BUT NOT LIMITED TO:
   A. CNST01003: BACKFILL AND RESTORATION
   B. CNST01005: PREPARATION OF GAS FACILITY HISTORICAL RECORDS
   C. CNST01006: COMMERCIALLY AVAILABLE SHORING SYSTEMS
   D. CNST02014: ENCAPSULATING CAST IRON JOINTS
   E. CNST03001: SQUEEZE–OFF OPERATIONS
   F. CNST03002: STOP–OFF OPERATIONS ON LOW PRESSURE MAINS
   G. CNST03005: PURGING REQUIREMENTS FOR GAS PIPELINES
      a. CNST03006: PURGING OPERATIONS – DIRECT DISPLACEMENT
      b. CNST03007: PURGING OPERATIONS – COMPLETE INERT FILL
      c. CNST03008: PURGING OPERATIONS – SLUG METHOD
   H. CNST03014: STOP OFF OPERATIONS FOR KLEISS EQUIPMENT
   I. CNST04005: INSTALLING STEEL DISTRIBUTION MAINS
   J. CNST04007: FIELD COLD BENDING OF LINE PIPE
   K. CNST04008: INSTALLING PLASTIC MAINS
   L. CNST04011: ABANDONMENT OF MAINS
   M. CNST04012: GROUTING ABANDONED PIPELINES
   N. CNST04030: RAISING MAIN AND SERVICE GATE BOXES
   O. CNST05001: JOINING OF PLASTIC PIPE
   P. CNST5010: GENERAL CONSTRUCTION REQUIREMENTS AND PIPE HANDLING
   Q. DAM01011: EXCAVATION AND EXCAVATION NOTIFICATION REQUIREMENTS FOR UNDERGROUND FACILITIES FOR MASSACHUSETTS AND RHODE ISLAND
   R. DAM01015: LOCATE AND MARK–OUT REQUIREMENTS FOR UNDERGROUND GAS FACILITIES
   S. DAM01016: LOCATE AND MARK–OUT OF UNDERGROUND FACILITIES
   T. GCON02001: SYSTEM OPERATING PROCEDURE (SOP)
   U. GEN01100: OPERATOR QUALIFICATION PLAN
   V. GEN03002: PROCESSING GAS MAIN AND NEW SERVICE WORK PACKAGES
   W. GEN03004: CHANGE CONTROL PROCEDURE FOR STANDARD CONSTRUCTION PROJECTS
   X. INR06002: SUPPLEMENTAL ODORIZATION FOR NEW PIPING
      - NOTIFY I&R FOR PROJECTS IN EXCESS OF 2500 FEET. ODOR MONITORING AND/OR SUPPLEMENTAL ODORIZATION MAY BE REQUIRED
   Y. MAIN5030: INSTALLATION OF POLYETHYLENE PIPE
   Z. MECH5010: JOINTS OTHER THAN WELDED
   AA. 030018–CS: SPECIFICATION AND HANDLING OF TRAFFIC PLATES
   AB. CNST01001: HORIZONTAL DIRECTIONAL DRILLING
   AC. CNST03011: NO–INTERRUPT SERVICE TRANSFER
   AD. CNST6061: TRACER WIRE INSTALLATIONS FOR PLASTIC MAINS AND SERVICES
   AE. MECH6010: CONNECTION OF DISSIMILAR POLYETHYLENE PLASTIC PIPE WITH ELECTROFUSION OR MECHANICAL COUPLING
   AF. CS–CNST002: TYPICAL UTILITY CROSSING AND TRENCH GUIDELINES
5. SERVICE SPECIFIC CONSTRUCTION STANDARDS, GAS POLICIES AND WORK METHODS:
   A. CMS03002: CUSTOMER METER AND SERVICE REGULATOR DESIGN AND INSTALLATION POLICY
   B. CMS04002: PURGING PROCEDURES FOR CUSTOMER METER SERVICES
   C. CNST03011: NO–INTERRUPT SERVICE TRANSFER
   D. CNST06002: INSTALLING DISTRIBUTION SERVICES
   E. CNST06003: INSTALLATION & MAINTENANCE POLICY FOR CURB VALVES ON SERVICE LINES WITH INSTALLED METER CAPACITIES OVER 1,000 SCFH THAT DON'T HAVE EXCESS FLOW VALVES
   F. CNST06009: METER/SERVICE RELOCATION GUIDELINE
   G. CNST06020: COMPLETION AND PROCESSING OF GAS SERVICE RECORD CARDS
   H. CNST06030: NOTIFICATION OF CUSTOMERS INVOLVED IN THE INTERRUPTION OF GAS SERVICE
   I. CS–SERV001: TYPICAL 1/2" SERVICE OUTSIDE SETS
   J. CS–SERV002: TYPICAL 1" SERVICE OUTSIDE SETS
   K. CS–SERV003: TYPICAL 1–1/4" SERVICE OUTSIDE SETS
   L. CS–SERV004: TYPICAL 2" SERVICE
   M. CS–SERV005: EXCESS FLOW VALVE REQUIREMENTS ON HP SERVICES
   N. CS–SERV009: TYPICAL 1/2" SERVICE INSIDE SETS
   O. CS–SERV010: TYPICAL 1" SERVICE INSIDE SETS
   P. HTAP–6010: NO–INTERRUPT 1 INCH CTS AND 1–1/4 INCH CTS SERVICE TRANSFER (NIST) LP TO 60 PSIG MAINS
   Q. SERV–5075: RELOCATION OF METER SET ASSEMBLIES INSIDE TO OUTSIDE
   R. SERV6076: 1–1/4" LP PLASTIC SERVICE WITH 1 AL–250 TC METER
   S. SERV6077: 1–1/4" CTS LP PLASTIC INSERT WITH 1 AL–250 TC EQUIV. METER INSIDE
   T. SERV–6185: HOT TAPPING MD BRANCH SADDLES OFF 4IN – 12IN 60 PSIG MAOP LIVE PLASTIC GAS MAIN USING MCELROY HOT TAPPING TOOL
   U. VALV6110: 1/2 INCH – 3 INCH POLYETHYLENE GAS SERVICE VALVE INSTALLATION
6. SEE TIE IN DETAILS FOR APPLICABLE MAIN CONNECTION REFERENCES.
7. SEE BILL OF MATERIAL FOR MATERIAL SPECIFICATION, STANDARD AND/OR APPLICABLE NATIONAL GRID "FITS" REFERENCE.
   A. FOR THIS PROJECT, GRADE B, X42, X52 AND EQUIVALENT ARE ACCEPTABLE STEEL MATERIAL STRENGTHS IF APPLICABLE. ALTERNATES TO THE BOM ARE ALLOWED WITHIN THIS RANGE BASED ON MATERIAL AVAILABILITY.

THE DDS COMPANIES
45 HENDRIX ROAD
WEST HENRIETTA, NY 14586
PHONE (585) 359-7540
FAX (585) 359-7541

BOSTON GAS COMPANY
d/b/a
nationalgrid
40 SYLVAN ROAD
WALTHAM, MA 02451

IFC

PE STAMP: 11/28/22 COMMONWEALTH OF MASSACHUSETTS MARK E. PETROSKI CIVIL NO. 54037 REGISTERED PROFESSIONAL ENGINEER

NO.	DESCRIPTION	DATE	DR.BY	CK.BY	APP.BY
B	REVISED BILL OF MATERIALS	01/09/2023	CJV	DMJ	MEP
A	ISSUED FOR CONSTRUCTION	11/29/2022	CJV	DMJ	MEP

75 PLEASANT ST
GAS MAIN EXTENSION
TYLER TER
NEWTON, MA

CONSTRUCTION NOTES

DWG SIZE	DESIGNER	ENGINEER	DATE:	ASSET I.D.	W.O. NO.:
22"X34"	DDS COMPANIES	C. VARGAS	11/29/2022	XXXXXXXX	1502891

DRAWING NO.	SHEET NO.
G-002	02

PRESSURE TESTING REQUIREMENTS:

1. PRESSURE TEST ALL DISTRIBUTION PIPING IN ACCORDANCE WITH:
   A. CNST04003: PRESSURE TESTING MAINS OPERATING BELOW 125 PSIG
   B. TEST PRESSURE (MINIMUM): 90 PSIG
   C. TEST DURATION BASED ON LENGTH AND DIAMETER IN ACCORDANCE WITH TABLE 1 OF CNST04003.
   D. TEST MEDIUM: AIR AND/OR NITROGEN

2. PRESSURE TEST SERVICES IN ACCORDANCE WITH:
   A. CNST06008: PRESSURE TESTING SERVICE LINES

WELDING:

1. NATIONAL GRID WELDING POLICIES AND PROCEDURES INCLUDE:
   A. CNST05002: WELDING POLICY
   B. CNST05003: PIPE WELDING SAFETY
   C. CNST05005: WELDING PROCEDURE SPECIFICATIONS
   D. MS-030: WELDING FILLER MATERIALS

2. PRIOR TO THE START OF ANY WORK THE CONTRACTOR SHALL SUBMIT WELDER CERTIFICATION DOCUMENTS FOR EACH OF THE WELDERS EMPLOYED ON THIS PROJECT.

3. WELDING PROCEDURE SPECIFICATIONS REQUIRED:
   A. BUTT WELDS (GROOVE): WPS-SMAW-E6010/7010 (LATEST REVISION)
   B. FILLET WELDS (BRANCH): WPS-SMAW-E6010/7010 (LATEST REVISION)

4. 10% (AT LEAST 1) OF WELDS SHALL BE SUBJECT TO NON-DESTRUCTIVE EXAMINATION (NDE):
   A. BUTT WELDS 2-INCH AND GREATER: 10% RADIOGRAPH
   B. BUTT WELDS < 2-INCHES: 10% MAGNETIC PARTICLE
   C. FILLET WELDS: 10% MAGNETIC PARTICLE

5. NDE AND WELD MAP SHALL BE PROVIDED BY SKYTESTING.

6. SKYTESTING SCHEDULING CONTACT:
   WILLIAM (BILL) CLARK
   CELL: 704-858-7794
   EMAIL: WCLARK@SKYTESTING.COM

CATHODIC PROTECTION:

1. IF EXISTING TEST STATIONS, WIRES, AND/OR MAGNESIUM ANODES ARE DISTURBED OR DAMAGED, NOTIFY THE NATIONAL GRID CORROSION DEPARTMENT:
   DAVE HALNEN: 781-379-7831 (FOR SUPERVISOR ISSUES)
   ALANNA GRONDINE: 339-225-5378 (FOR ENGINEERING ISSUES)
   ALISSIA APINIAN-MARGIOS: 781-296-7569 (FOR MANAGEMENT ISSUES)

2. 24 HOUR NOTICE IS REQUIRED PRIOR TO INSTALLATION OF INSULATED FITTINGS TO ALLOW FOR ACCEPTANCE TESTING.

3. NATIONAL GRID CORROSION GAS POLICIES AND WORK METHODS INCLUDE:
   A. CORO1100: CORROSION DESIGN CRITERIA
   B. CORO2001: APPLICATION OF COATING SYSTEMS
   C. CORO2020: INSPECTING EXPOSED STEEL PIPE FOR CORROSION
   D. CORO2021: INSPECTING EXPOSED CAST OR DUCTILE PIPING FOR GRAPHITIZATION
   E. CORO3001: TESTING OF PIPE COATING (JEEP TESTING)
   F. CORO4001: INSTALLATION OF MAGNESIUM ANODES
   G. CORO4003: INSTALLATION OF TEST STATIONS FOR CATHODIC PROTECTION
   H. CORO4004: INSTALLATION OF WIRE CONNECTIONS
   I. CORO4005: INSTALLATION OF INSULATING JOINTS FOR CATHODIC PROTECTION
   J. 030031-CS: FACILITY COATING GUIDE
   K. 030026-CS: INSTALLATION OF TEST STATIONS FOR CATHODIC PROTECTION
   P. 030036-CS: INSTALLING WIRE CONNECTIONS

4. CORROSION DESIGN:
   A. SEE DETAIL A ON SH 04
   • INSTALL A 1-WIRE TEST STATION TO THE PROPOSED INSULATED COUPLING (PIPE END SPACER AND INSULATOR SLEEVE FACING THE CAST IRON) BY USING THE CLIP ON THE COUPLING. INCLUDE 1-17 LB ANODE SPACED AT LEAST 1 FT BELOW THE MAIN. INSTALL THE 9X9 TEST STATION IN AN ACCESSIBLE LOCATION.

5. STEEL PIPE, FITTINGS, VALVES AND OTHER CARBON STEEL COMPONENTS TO BE BURIED WHICH ARE NOT FACTORY COATED FOR BURIED SERVICE SHALL BE FIELD COATED.

ENVIRONMENTAL:

1. WORK SHALL CONFORM TO THE NATIONAL GRID ENVIRONMENTAL POLICY.

2. NATIONAL GRID ENVIRONMENTAL CONTACT:
   NAME: JAIME WALKER
   PHONE: (978) 551-1156
   EMAIL: JAIME.WALKER@NATIONALGRID.COM

3. CONTRACTOR SHALL REVIEW THE PROJECT WORK ORDER PACKAGE FOR ENVIRONMENTAL GUIDANCE FORMS, FOR EXAMPLE EG-301, FOR THE RESPECTIVE STATE.

4. WHEN SOILS OR LIQUIDS ARE ENCOUNTERED THAT ARE BELIEVED TO BE CONTAMINATED WITH OIL AND/OR HAZARDOUS MATERIAL, EXCAVATION WORK SHALL BE HALTED AND FIELD PERSONNEL SHALL NOTIFY THEIR IMMEDIATE SUPERVISOR.

5. NO EXCAVATED SOIL THAT IS CONTAMINATED SHALL LEAVE THE WORK SITE UNTIL ENVIRONMENTAL HAS MADE A DETERMINATION FOR ITS PROPER DISPOSAL.

6. NATIONAL GRID ENVIRONMENT POLICIES AND PROCEDURES INCLUDE:
   A. SHE02001: HANDLING CONTAMINATED MATERIALS AND PIPING
   B. SHE02002: REMOVING MERCURY REGULATORS AND DEVICES
   C. SHE02003: ENCOUNTERING CONTAMINATION WHILE EXCAVATING
   D. EG303-NE: BEST MANAGEMENT PRACTICES
   E. EG140: USED GAS PIPE MANAGEMENT

7. ENVIRONMENTAL REQUIREMENTS: N/A

SAFETY:

1. WORK SHALL CONFORM TO THE NATIONAL GRID EMPLOYEE SAFETY HANDBOOK AND OSHA REQUIREMENTS.

2. REQUIRED PPE SHALL BE WORN AND UTILIZED IN ACCORDANCE WITH THE CURRENT NATIONAL GRID SAFETY POLICY.

3. A NATIONAL GRID APPROVED CONTRACTOR HEALTH AND SAFETY PLAN (HASP) IS REQUIRED PRIOR TO CONSTRUCTION.

4. CONSTRUCTION SIGNING, DRUMS, BARRICADES, AND OTHER TRAFFIC CONTROL DEVICES SHALL CONFORM TO THE MANUAL ON UNIFORM TRAFFIC CONTROL DEVICES (M.U.T.C.D.) PART VI AND SHALL BE MAINTAINED BY THE CONTRACTOR.

5. NATIONAL GRID SAFETY PROCEDURES COVER THE FOLLOWING CATEGORIES:
   A- ADMINISTRATIVE; B- INSPECTIONS; C- WALKING WORKING SURFACES; D- MEANS OF EGRESS; E- MATERIAL HANDLING AND STORAGE; F- TOXIC AND HAZARDOUS SUBSTANCES; G- HAZARDOUS MATERIALS; H- PERSONAL PROTECTIVE EQUIPMENT; I- GENERAL ENVIRONMENTAL CONTROLS, J- ACCIDENT INVESTIGATION; K- MACHINERY AND GUARDING; L- WELDING/CUTTING/BRAZING; M- EXCAVATIONS; N- CONTRACTORS; FIRE PROTECTION; Q- FLEET AND ROADWAY SAFETY

6. NATIONAL GRID SAFETY POLICIES AND PROCEDURES INCLUDE:
   A. SHE01001: GENERAL SAFETY REQUIREMENTS
   B. SHE01002: SUPPLIED-AIR RESPIRATORS
   C. SHE01003: USING AND MAINTAINING PORTABLE GAS MONITORS
   D. SHE01004: USING AND MAINTAINING FLAME IONIZATION UNITS
   E. SHE01005: DISSIPATING STATIC ELECTRICAL CHARGES ON PLASTIC PIPE
   F. SHE01006: ENTERING GAS UTILITY VAULTS
   G. SHE01008: USING AND MAINTAINING THE GAS EXPLORER
   H. SHE01009: DISSIPATING STATIC ELECTRICAL CHARGES ON PLASTIC PIPE
   I. SHE01010: THE APPLICATION OF FORMAL PROCESS SAFETY ASSESSMENTS TO HIGHER-RISK GAS ACTIVITIES PERFORMED IN THE FIELD

7. JOB BRIEFINGS, AT A MINIMUM, SHALL BE CONDUCTED BEFORE THE START OF THE FIRST JOB ON EACH DAY OR SHIFT. ADDITIONAL BRIEFINGS MAY BE REQUIRED AFTER EXTENDED WORK BREAKS.

8. ANY AND ALL WORKERS THAT HAVE ANY POTENTIAL TO COME INTO CONTACT WITH SOIL AND/OR GROUNDWATER MUST HAVE UP-TO-DATE OSHA 40-HOUR HAZWOPER TRAINING. COPIES OF OSHA CERTIFICATES/TRAINING REFRESHERS SHALL BE PROVIDED TO NATIONAL GRID FOR REVIEW PRIOR TO THE START OF WORK.

OTHER PERMITTING REQUIREMENTS:

1. CITY OF NEWTON STREET OPENING PERMIT
2. GRANT OF LOCATION

UTILITY OWNER INFORMATION:

SEWER: NEWTON DPW - UTILITIES DIVISON
#1000 COMMONWEALTH AV.
NEWTON CENTRE, MA 02459

MWRA
#2 GRIFFIN WAY
CHELSEA, MA 02150

WATER: NEWTON DPW - UTILITIES DIVISON
#1000 COMMONWEALTH AV
NEWTON CENTRE, MA 02459

MWRA
#2 GRIFFIN WAY
CHELSEA, MA 02150

ELECTRIC: EVERSOURCE ELECTRIC "A"
#1165 MASSACHUSETTS AV.
DORCHESTER, MA 02125

GAS: NATIONAL GRID GAS
#40 SYLVAN RD.
WALTHAM, MA 02451

TELEPHONE: VERIZON
#385 MYLES STANDISH BLVD.
TAUNTON, MA 02780

CABLE: RCN
#956 MASSACHUSETTS AV.
ARLINGTON, MA 02476

COMCAST CABLE CORPORATION
PO BOX #6505, #5 OMNI WAY
CHELMSFORD, MA 01824

AT&T/TELEPORT COMMUNICATIONS AMERICA, C/O
SIENA ENGINEERING GROUP
#50 MALL ROAD - SUITE #203
BURLINGTON, MA 01803

CROWN CASTLE
#80 CENTRAL ST.
BOXBOROUGH, MA 01719

MCI-VERIZON BUSINESS
PO BOX #600
CHARLTON, MA 01507

EVERSOURCE FIBER
#247 STATION DR., MAIL STOP: SUM SE #320
WESTWOOD, MA 02090

REFERENCE DRAWINGS:

1. LOCATION OF IDENTIFIED UNDERGROUND UTILITIES ARE AN APPROXIMATE BASED ON AVAILABLE RECORD AND FIELD INFORMATION IN ACCORDANCE WITH CI/ASCE 38-02. ADDITIONAL UTILITIES MAY EXIST WHICH ARE NOT IDENTIFIED ON THESE PLANS. ALL EXISTING UTILITIES SHALL BE VERIFIED BY THE CONTRACTOR FOR SERVICE, SIZE, INVERT ELEVATIONS, LOCATIONS, ETC.

LEGEND

- EXISTING WROUGHT IRON GAS MAIN, VALVE, REGULATOR, CAP
- EXISTING CAST IRON GAS MAIN, VALVE, REGULATOR, CAP
- EXISTING BARE STEEL GAS MAIN, VALVE, REGULATOR, CAP
- EXISTING COATED STEEL GAS MAIN, VALVE, REGULATOR, CAP
- EXISTING PLASTIC GAS MAIN, VALVE, REDUCER
- EXISTING POLYBUTYLENE GAS MAIN, VALVE, REDUCER
- EXISTING CRITICAL GAS MAIN
- PROPOSED GAS MAIN, VALVE, COUPLING, TEE, OVER
- RETIRED GAS MAIN
- NEW GAS SERVICE, FLOW LIMITER, METER, VALVE
- EXISTING GAS SERVICE, FLOW LIMITER, METER, VALVE
- TREE, BUSH, TREE LINE
- EXISTING ROW/PROPERTY LINE
- EXISTING CENTERLINE W/ MARKER
- EXISTING FIBER OPTIC LINE, CABLE BOX
- EXISTING OVERHEAD ELECTRIC LINE, POWERPOLE, POLE W/ GUYWIRE, LIGHT POLE
- EXISTING UNDERGROUND ELECTRIC LINE, HANDHOLE, PEDESTAL
- EXISTING SANITARY SEWER LINE, CLEANOUT, MANHOLE
- EXISTING STORM DRAIN/CULVERT, CATCH BASIN, MANHOLE
- EXISTING WATER MAIN, VALVE, HYDRANT
- EXISTING UNDERGROUND TELEPHONE
- EXISTING STEAM MAIN
- EXISTING MBTA DUCTS
- EXISTING MWRA WATER MAIN
- EXISTING MWRA SEWER/DRAIN MAIN
- PROPOSED FIBER OPTIC LINE
- PROPOSED OVERHEAD ELECTRIC LINE
- PROPOSED UNDERGROUND ELECTRIC LINE
- PROPOSED SANITARY SEWER LINE
- PROPOSED STORM DRAIN/CULVERT
- PROPOSED WATER MAIN
- PROPOSED UNDERGROUND TELEPHONE
- PROPOSED PERMANENT EASEMENT
- EXISTING GUIDE RAIL
- EXISTING FENCE
- EXISTING STONE WALL
- EXISTING STREAM/RIVER EDGE
- EXISTING WETLAND
- EXISTING WETLAND BUFFER
- EXISTING MAJOR CONTOUR
- EXISTING MINOR CONTOUR
- HAZARDOUS (HAZWOPER) AREA
- RAILROAD
- TOWN LINE

BILL OF MATERIALS

ITEM	QTY	UOM	DESCRIPTION	SIZE (IN.)	NATIONAL GRID REFERENCE	SAP ID NUMBER
1*	80	FT	PIPE, MEDIUM DENSITY, 40 FT LENGTHS	6	120026-MS	9384339
2*	70	FT	PIPE, MEDIUM DENSITY, 250 FT COILS	2	120026-MS	9340876
3*	1	EA	TEE, PLASTIC, ELECTROFUSION, TAPPING	6X2	120025-MS	9342331
4	1	EA	COUPLING, COMPRESSION, RESTRAINING, INSULATED, 6.9IN OD, RS	6	FITS6025	9312223
5	1	EA	COUPLING, COMPRESSION, SELF-RESTRAINING, INSULATED, 7.1IN OD, OS	6	FITS6025	9341550
6	1	EA	STIFFENER, INSERT; METAL	6	FITS6025	9340225
7*	1	EA	CAP, PLASTIC, BUTT FUSE	6	120026-MS	9339733
8*	1	EA	ELBOW, PLASTIC, 90 DEG, BUTT FUSE	2	120026-MS	9341385
9*	2	EA	VALVE, BALL, FULL PORT, PLASTIC	6	VALV6020	9323032
10*	2	EA	VALVE BOX	6	VALV6020	9339893
11*	1	EA	VALVE, BALL, FULL PORT, PLASTIC	2	VALV6020	9341784
12*	1	EA	VALVE BOX	2	VALV6020	9339890
13	2	EA	SADDLE, CAST IRON	6X1 1/2	FITS6016	9315632
14	2	EA	PLUG, THREADED, CI	1 1/2	120030-MS	9312285
15	1	EA	9X9 TEST STATION BOX	9	030026-CS	9339391
16	1	EA	TEST BOX COVER		030026-CS	9339797
17	1	EA	ANODE, MAGNESIUM, 17 LB, HIGH POTENTIAL	30	120004-MS	9311183
18*	1	EA	RISER, FLANGED TOP	2	MATL-3140	9322622
19*	1	EA	VALVE, DUCTILE IRON, BALL, FLAT FACE	2	MATL-3150	9306256
20*	1	EA	FLANGE, BLIND, FLAT FACE	2	FITS6110	9382074
21*	1	EA	INSULATING KIT, FLANGE	2	FITS6115	9340992
22*	1	EA	GASKET, RING	2	FITS6115	9341161
23*	A/R	EA	BOLT, STUD, W/ TWO HEAVY HEX NUTS	5/8 X 4	FITS6115	9392186
24	1	EA	TAPE, YELLOW CAUTION, GAS MAIN, 1000' ROLL	6	CNST6060	9341904
25	220	FT	WIRE, TRACER, DIRECT BURY USE		CNST6061	9315005

*** SOME QUANTITIES LABELED ON LAYOUT SHEETS**

THE DDS COMPANIES
45 HENDRIX ROAD
WEST HENRIETTA, NY 14586
PHONE (585) 359-7540
FAX (585) 359-7541

BOSTON GAS COMPANY d/b/a nationalgrid
40 SYLVAN ROAD
WALTHAM, MA 02451

IFC

PE STAMP: 11/28/22

NO.	DESCRIPTION	DATE	DR.BY	CK.BY	APP.BY
B	REVISED BILL OF MATERIALS	01/09/2023	CJV	DMJ	MEP
A	ISSUED FOR CONSTRUCTION	11/29/2022	CJV	DMJ	MEP

75 PLEASANT ST
GAS MAIN EXTENSION
TYLER TER
NEWTON, MA

CONSTRUCTION NOTES & BILL OF MATERIALS

DWG SIZE	DESIGNER	ENGINEER	DATE:	ASSET I.D.	W.O. NO.:
22"X34"	DDS COMPANIES	C. VARGAS	11/29/2022	XXXXXXXX	1502891

DRAWING NO.	SHEET NO.
G-003	03

PROJECT SCOPE:

- MAIN EXTENSION- INSTALL APRX. 75 FEET OF 6 INCH, LP PLASTIC MAIN EXTENDING FROM THE EXISTING 6 INCH, LP CAST IRON (1916) MAIN IN TYLER TER FOR NEW SERVICE AT #75 PLEASANT ST.
- SERVICE INSTALLATION- INSTALL APRX. 60 FEET OF 2 INCH, LP PLASTIC SERVICE AT #75 PLEASANT ST EXTENDING FROM THE NEW 6 INCH, LP PLASTIC MAIN EXTENSION.

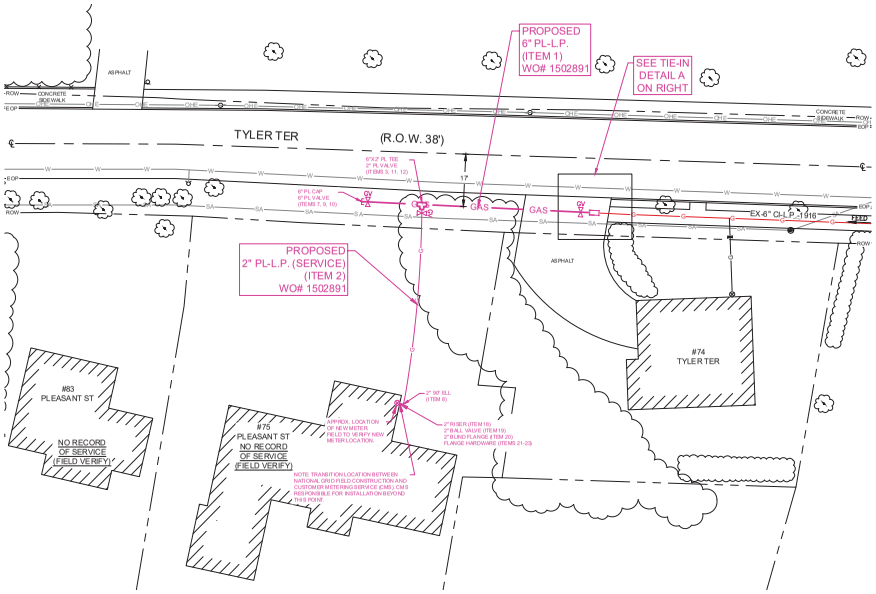

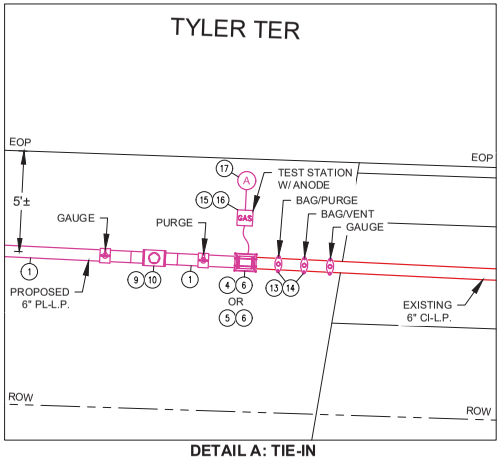

DETAIL A: TIE-IN

(TYLER TER)

SCALE - 1:3

SEE NOTE 1

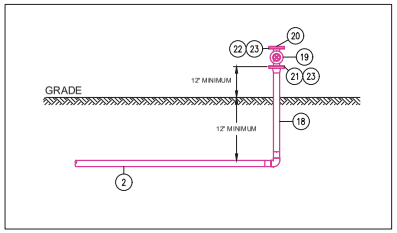

SERVICE RISER DETAIL

NTS

NOTE:

1. INSTALL A 1-WIRE TEST STATION TO THE PROPOSED INSULATED COUPLING (PIPE END SPACER AND INSULATOR SLEEVE FACING THE CAST IRON) BY USING THE CLIP ON THE COUPLING. INCLUDE 1-17 LB ANODE SPACED AT LEAST 1 FT BELOW THE MAIN. INSTALL THE 9X9 TEST STATION IN AN ACCESSIBLE LOCATION.

20' 0' 20' 40'

1"=20'

THE DDS COMPANIES

45 HENDRIX ROAD
WEST HENRIETTA, NY 14586
PHONE (585) 359-7540
FAX (585) 359-7541

BOSTON GAS COMPANY
d/b/a
nationalgrid
40 SYLVAN ROAD
WALTHAM, MA 02451

IFC

RE STAMP:

NO.	DESCRIPTION	DATE	DR.BY	CK.BY	APP.BY
B	REVISED BILL OF MATERIALS	01/09/2023	CJV	DMJ	MEP
A	ISSUED FOR CONSTRUCTION	11/29/2022	CJV	DMJ	MEP

75 PLEASANT ST
GAS MAIN EXTENSION
TYLER TER
NEWTON, MA

OVERALL LAYOUT SHEET & TIE-IN DETAIL

DWG SIZE	DESIGNER	ENGINEER	DATE:	ASSET I.D.	W.O. NO.:
22"X34"	DDS COMPANIES	C. VARGAS	11/29/2022	XXXXXXXX	1502891

DRAWING NO.	SHEET NO.
C-001	04

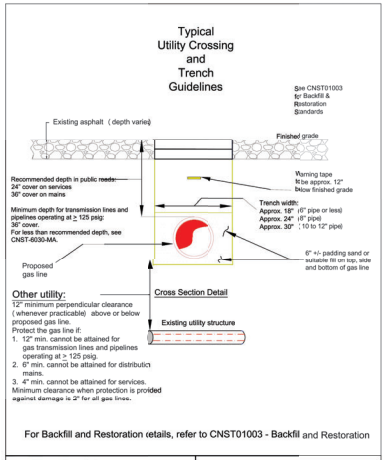

nationalgrid MASS.	TYPICAL UTILITY CROSSING AND TRENCH GUIDELINES	
Key Changes: REV 0 NEW STANDARD FOR MASS.	DATE: 09/15/2014	EFFECTIVE DATE: 04/15/2019
	DESIGN: PAUL GUGLIOTTA	STD. DWG. NO. CS-CNST002-MA
	DRAWN: N. COSTANZO	

UNCONTROLLED WHEN PRINTED 1 OF 1 © National Grid Gas plc 2019– All Rights Reserved

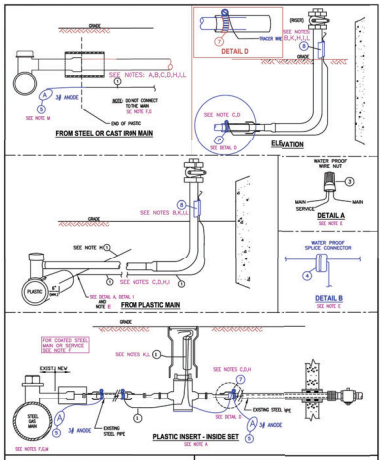

nationalgrid LI-MA-RI-UNY	TRACER WIRE INSTALLATIONS FOR PLASTIC MAINS AND SERVICES	
REVISIONS: UPDATED ITEM 6'S REVISED NOTES	DATE: 10/21/2004	EFFECTIVE DATE: 06/29/2020
	DESIGN: GUGLIOTTA / MCLOUGHLIN	STD. DWG. NO. CNST-6061
	DRAWN: GUGLIOTTA / DIMAIO	

UNCONTROLLED WHEN PRINTED 1 OF 4 © National Grid Gas plc 2020– All Rights Reserved

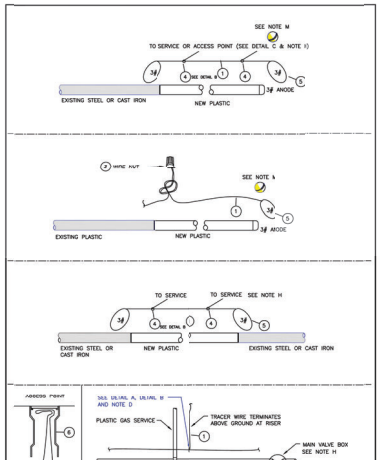

UNCONTROLLED WHEN PRINTED CNST–6061 2 OF 3 © National Grid Gas plc 2019– All Rights Reserved

		LI/NY/CI MA/SS	LI/NY/RI
8	TRACER WIRE SNAP, 2" (represents steel size)	9386131	9386134
8	TRACER WIRE SNAP, 1 ½" (represents steel size)	9386159	9386156
8	TRACER WIRE SNAP, 1" (represents steel size)	9386151	9386150
8	TRACER WIRE SNAP, ½" (represents steel size)	9385561	9385568
7	CLAMP, STAINLESS	9331701	9307873
6	VALVE BOX, ROADWAY	9339898	9312344 UNY 9311208 RI
5	ANODE, 1 LB MAGNESIUM	9315641	9315645
4	WIRE SPLICE CONNECTOR, WATERPROOF	9308039	9308036
3	WIRE NUT, PLASTIC, WATERPROOF	9331164	9314831
2	WIRE, DIRECTIONAL DRILL, STAINLESS, STRANDED 10 AWG	9314181	9314187
1	TRACER WIRE, DIRECT BURY, COPPER, 12 AWG	9311500	9315505
NO.	ITEM	IAP ITEM ID	
	BILL OF MATERIAL		

A. Inside sets: Terminate tracer wire in the curb valve box. Allow enough wire to extend 18" to 24" above grade.

B. Outside Sets: Tracer wire should be extended approximately 18" above grade at riser. Connect tracer wire to the riser using a "tracer snap", item #8. If the appropriate tracer snap is not available, wrap or tie the tracer wire to the riser. Do not permanently attach tracer wire to the riser. Tracer wire should not exceed 6' above the point where it is secured to the riser.

C. Partially tubed services: When the abandoned portion of an existing steel service pipe is used as a sleeve for the new plastic, all cut out sections of the steel pipe to be inserted with plastic, shall be connected using a section of tracer wire to maintain continuity. **If the existing service is coated steel , see** Installation of Test Stations for Cathodic Protection [030026-CS] and Installation of Test Stations for Cathodic Protection [CORD4003] **or contact** corrosion department for more guidance.

D. Thermite welding of tracer wire to abandoned steel service is only acceptable prior to insertion of the plastic tubing. See Installation of Test Stations for Cathodic Protection [030026-CS].

E. Plastic Mains: The service tracer wire shall be connected to the plastic main tracer wire using item #3 detail A or item #4 (detail B - preferred) in accordance with Installing Wire Connections [CORD4004].

F. Coated Steel Mains: Do not connect the tracer wire to the steel main. See Installation of Test Stations for Cathodic Protection [030026-CS] and Installation of Test Stations for Cathodic Protection [CORD4003] or contact corrosion department for more guidance.

G. Cast Iron or Bare steel Mains: Do not connect the tracer wire to the steel main. It is required in LI and MA, and suggested in all other areas to terminate the tracing wire with a 3# anode.

Tracer Wire Installation Notes

H. Install tracer wire in close proximity to the plastic pipe. Approximately 4" to 6" away from the pipe. LI & MA-Above or alongside, UNY- alongside, RI-Under or alongside. Exception:For trenchless pipe installations, the minimum clearance is waived.

I. Maintain separation of approximately 4" from service riser. Do not permanently connect the tracer wire to the riser.

J. For horizontal directional drill installations, use stainless wire, item #2.

K. Tracer wire installed in boxes should allow enough wire to extend 18" to 24" above grade.

L. Verification: upon completion, the installer shall verify the location of the main or service using the tracer wire and locating device and perform a mark out using the conductive method.

M. LI and MA: Required to terminate the tracing wire with a 3# anode. This is to ground the tracer wire and increase signal strength when locating. This practice is recommended in all areas where signal strength is an issue.

Regional Notes

NYC ONLY: refer to Installation of Marker Tapes and EMS Pipeline Locators for Mains and Services [CNST6060-NYC] **for installation of electronic marker ball n place of tracer wire.**

UNCONTROLLED WHEN PRINTED 3 OF 3 © National Grid Gas plc 2020 – All Rights Reserved
Effective Date 06/25/2020 CNST-6061

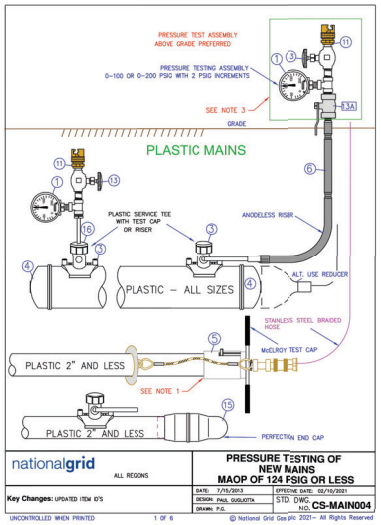

nationalgrid ALL REGIONS	PRESSURE TESTING OF NEW MAINS MAOP OF 124 PSIG OR LESS	
Key Changes: UPDATED ITEM 6'S	DATE: 7/15/2013	EFFECTIVE DATE: 02/15/2021
	DESIGN: PAUL GUGLIOTTA	STD. DWG. NO. CS-MAIN004
	DRAWN: P.G.	

UNCONTROLLED WHEN PRINTED 1 OF 6 © National Grid Gas plc 2021– All Rights Reserved

NOTES:
1. INSTALL PER McELROY MANUFACTURER'S INSTRUCTIONS.
2. WHEN USING MECHANICAL COUPLINGS (AS SHOWN IN DETAIL A), NON-RESTRAINING COUPLING SHALL BE STRAPPED AND THE ENDS SHALL BE BLOCKED PER APPROVED STANDARD DRAWINGS. RESTRAINING COUPLINGS NEED TO BE EITHER STRAPPED OR BLOCKED. **WHEN USING RESTRAINING COUPLINGS, STRAPPING NUTS SHOULD BE HAND TIGHT.**
2A. ON EXISTING STEEL SYSTEMS: REFER TO THE TABLE BELOW FOR THE MINIMUM SAFE DISTANCE FROM THE EXCAVATION WALL. IF A BURIED, UNSTRAPPED COUPLING EXISTS AT A DISTANCE LESS THAN THE MINIMUM SAFE EMBEDMENT DISTANCE FROM THE WALL, THEN BLOCKING IS REQUIRED FOR THE PRESSURE TEST. IF AN ALL WELDED SYSTEM CAN NOT BE CONFIRMED, THE WELDED OR FLANGED ENDS SHALL BE BLOCKED

PIPE SIZE (INCHES)	MINIMUM SAFE DISTANCE FROM THE EXCAVATION WALL (FEET)
2	5
3	8
4	12
6	24
8	41
12	70

REFER TO CONSTRUCTION STANDARD FITS-6025 AND FITS-6015 FOR LIST OF COUPLINGS.
3. IT IS RECOMMENDED THAT THE GAUGE ASSEMBLY BE ABOVE GRADE TO PREVENT PERSONNEL FROM ENTERING THE TRENCH WHILE THE PRESSURE TEST IS UNDERWAY.
4. ONE PRESSURE TEST GAUGE AT EACH PIPE END IS RECOMMENDED TO VERIFY THE PRESSURE. ALL GAUGES SHALL BE 0-100 OR 0-200 PSIG RANGE (2 PSIG INCREMENTS REQ'D IN NY STATE ONLY)
5. REFER TO CNST1003 "PRESSURE TESTING OF MAINS OPERATING BELOW 125 PSIG" FOR TESTING AND DESIGN REQUIREMENTS

ITEM	DESCRIPTION	SAP ITEM D LI / MA / NY	SAP ITEMS RI AND UNY
1	PRESSURE GAUGE 0-100 OR 0-200 PSIG – 2 PSI INCREMENTS		
	0-200 PSIG STAINLESS STEEL ½" NPT 3-1/2" DIAL	935485	TOOL ITEM
	0-200 PSIG STAINLESS STEEL ½" NPT 2-1/2" DIAL	9356930	TOOL ITEM
	0-100 PSIG STAINLESS STEEL ½" NPT	NON ITOOK	TOOL ITEM
2	SIGN – WARNING PRESSURE TEST (AS REQUIRED IN FIELD)	9332361	NON STOCK
3	TEE SERVICE – ELECTROFUSION YELLOW MD 1/2" CTS BUTT FUSE OUTLET		
	2" MAIN X ½" BUTT FUSE OUTLET LI/MAN/NYC	9342257 2X1/2	NON STOCK
	4" MAIN X ½" BUTT FUSE OUTLET LI/MAN/NYC	9342258 4X1/2	NON STOCK
	6" MAIN X ½" BUTT FUSE OUTLET LI/MAN/NYC	9342258 6X1/2	NON STOCK
	8" MAIN X ½" BUTT FUSE OUTLET LI/MAN/NYC	9342271 8X1/2	NON STOCK
	TEE SERVICE – ELECTROFUSION YELLOW MD 1" CTS BUTT FUSE OUTLET		
	1-1/4" MAIN X 1" OUTLET LI	9342332 1-1/4 X 1	NON STOCK
	2" MAIN X 1" OUTLET LI	9342519 2X1	NON STOCK
	4" MAIN X 1" OUTLET LI	9342521 4X1	NON STOCK
	6" MAIN X 1" OUTLET LI	9342328 6X1	NON STOCK
	8" MAIN X 1" OUTLET LI	9342372 8X1	NON STOCK
	TEE SERVICE – ELECTROFUSION BLACK HD 1" IPS BUTT FISE OUTLET		
	2" MAIN X 1" IPS OUTLET MASS	9322653 2X1	NON STOCK
	3" MAIN X 1" IPS OUTLET MASS	9322628 3X1	NON STOCK
	4" MAIN X 1" IPS OUTLET MASS	9322626 4X1	NON STOCK
	6" MAIN X 1" IPS OUTLET MASS	9322626 6X1	NON STOCK
	8" MAIN X 1" IPS OUTLET MASS	9323497 8X1	NON STOCK
	12" MAIN X 1" IPS OUTLET LI, NYC, MA	9351831 12X1	NON STOCK
	TEE SERVICE – SADDLE FUSION HIGH DENSITY BLACK 1/2" CTS BUTT FUSE		
	2" MAIN X 1/2" OUTLET LI	9342405 2X1/2	NON STOCK
	4" MAIN X 1/2" OUTLET LI	9342406 4X1/2	NON STOCK
	6" MAIN X 1/2" OUTLET LI	9342407 6X1/2	NON STOCK
	8" MAIN X 1/2" OUTLET LI	9342408 8X1/2	NON STOCK
	TEE SERVICE – SADDLE FUSION HIGH DENSITY BLACK 1" CTS BUTT FUSE		
	2" MAIN X 1" OUTLET LI	9342409 2X1 SDR 9	9315907 2X1
	4" MAIN X 1" OUTLET LI	9342429 4X1 SDR 9	9315964 1X1
	6" MAIN X 1" OUTLET LI	9342430 6X1 SDR 9	9315963 1X1
	8" MAIN X 1" OUTLET LI	9342431 8X1 SDR 9	9315962 1X1
	12" MAIN X 1" OUTLET	NON STOCK	9314629 2X1
	TEE SERVICE MECHANICAL X PERFECTION OUTLET		
	2" MAIN X 1/2" OUTLET	NON STOCK	9308584 X1/2
	4" MAIN X 1/2" OUTLET	NON STOCK	9308583 (X1/2
	6" MAIN X 1/2" OUTLET	NON STOCK	9308472 (X1/2
	8" MAIN X 1/2" OUTLET	NON STOCK	9308471 (X1/2
	2" MAIN X 1" OUTLET	9315492 2X1	9315492 X1
	4" MAIN X 1" OUTLET	9315493 4X1	
	6" MAIN X 1" OUTLET	9315494 6X1	9315490 (X1
	8" MAIN X 1" OUTLET	9308473 8X1	9308473 (X1
	8" MAIN X 1" OUTLET	9308178 8X1	9308178 (X1

UNCONTROLLED WHEN PRINTED 4 OF 6 © National Grid Gas plc 2021 – All Rights Reserved
Effective Date 7/15/2013 CS-MAIN004

ITEM	DESCRIPTION	ORACLE ITEM ID LI / MA/ NYC	PEOPLESOFT ITEM RI AND UNY
4	CAP END PLASTIC MEDIUM DENSITY YELLOW BUTT FUSE		
	2" SDR11	2" 933954	NON STOCK
	3" SDR 11	3" 933954	NON STOCK
	4" SDR 11	4" 933953	NON STOCK
	6" SDR 11	6" 933973	NON STOCK
	8" SDR 13.5	8" 933959	NON STOCK
	12" SDR 11.5	12" 933956	NON STOCK
	CAP END PLASTIC HIGH DENSITY BLACK BJTT FUSION		
	2" SDR 9	2" 933953i	NON STOCK
	4" SDR 9	4" 933953i	NON STOCK
	6" SDR 9	6" 933953i	NON STOCK
	8" SDR 9	8" 933953i	NON STOCK
	2" SDR 11 MASS RI & UNY	2" 931268i	2" 931268i
	3" SDR 11 MASS RI & UNY	3" 931027i	3" 931027i
	4" SDR 11 MASS RI & UNY	4" 931285i	4" 931285i
	6" SDR 11 MASS RI & UNY	6" 931284i	6" 931284i
	8" SDR 11 MASS RI & UNY	8" 931286i	8" 931286i
	12" SDR 11 RI UNY	NON STOCK	12" 930972i
	6" SDR 13.5 RI	NON STOCK	6" 931283i
	12" SDR 13.5 RI	NON STOCK	12" 931460i
5	McELROY TEST CAPS (165 PSIG MAX)	NON STOCK	NON STOCK
	1-1/4" MODEL TP	TP-308	TP-308
	2" MODEL TP-310	TP-310	TP-310
	RISER		
6	1" CTS MEDIUM DENSITY X ½" NPT OUTLET	9344366	NON STOCK
	1" CTS MEDIUM DENSITY X 1-1/4" IPS OUTLET	9340874	NON STOCK
	1" CTS MEDIUM DENSITY X 1" OUTLET	9340833	NON STOCK
	1" ISO EQUIVALENT X 1" OUTLET	9340833	NON STOCK
	1" CTS HIGH DENSITY .090" WALL X 1" IPS STEEL OUTLET	NON STOCK	9316460
	½" CTS .090" WALL PERFECTION END X ½" NPT STEEL	NON STOCK	9310266
	1-1/4" CTS .090" WALL PERFECTION END X 1-1/4" NPT STEEL	NON STOCK	9306180
	OR TEST CAPS WITH STEEL OR PLASTIC PIPE TO TEST TEE	0031110 OR TOOL	TOOL ROOM
	TEST CAP FOR CENTRAL PLASTIC ELECTROFUSE TAPPING TEE	ROOR ITEM	ITEM
7	FLANGE 150# WELD END FLAT FACE		
	2"	9314322	2" 9314322
	3"	9314451	3" 9314451
	4"	9314400	4" 9314400
	6"	9308658	6" 9308659
	8"	9308748	8" 9308748
	12"	9308650	12" 9308660
	16"	9322253 MA	16" NON STOCK
	20"	9322252 MA	20" NON STOCK
8	BLIND FLANGE CLASS 150# ASTM A-105		
	2" FLAT FACE WITH ¼" CENTER NPT TAP	9341d04	2" NON STOCK
	3" FLAT FACE WITH ¼" CENTER NPT TAP	9341d14	3" NON STOCK
	4" FLAT FACE WITH ¼" CENTER NPT TAP	9341d05	4" NON STOCK
	6" FLAT FACE WITH ¼" CENTER NPT TAP	9340d74	6" NON STOCK
	8" FLAT FACE	9307d71	8" 9308663
	12" FLAT FACE	9307d74	3" 9307757
	16" FLAT FACE	9309d22	4" 9306252
	6" FLAT FACE	9308f57	6" 9306518
	8" FLAT FACE	9307f70	8" 9307750
	12" FLAT FACE	9308f79	12" 9308749
9	GASKETS	-	
	2" FULL FACE 150#	9333f1j	2" 9315688
	3" FULL FACE 150#	9341f1j	3" 9312567
	4" FULL FACE 150#	9341f1j	4" 9312569
	6" FULL FACE 150#	9340f1j	6" 9312568
	8" FULL FACE 150#	9341f85	8" 9315689
	12" RING TYPE 150#	9341f85	12" NON STOCK

UNCONTROLLED WHEN PRINTED 5 OF 6 © National Grid Gas plc 2021 – All Rights Reserved
Effective Date 7/15/2013 CS-MAIN004

ITEM	RESCRIPTION	ORACLE ITEM ID LI / MA / NYC	PEOPLESOFT ITEM RI AND UNY
10	END CAPS – STEEL WELD END STANDARD WALL –GRADE B		
	2"	9312095	2" 9312095
	3"	9308719	3" 9308719
	4"	9312096	4" 9312096
	6"	9312094	6" 9312094
	8"	9312093	8" 9312093
	10"	9315182	10" 9315182
	12"	9312092	12" 9312092
	16"	9314824	16" 9314824
	20"	9336687	20" 9314823
11	THOR FITTING		
	½" MALE NPT X HOSE CONNECTION	0304089	NON STOCK
	½" FEMALE X HOSE CONNECTION	0304301	NON STOCK
12	THRED-O-LET		
	12" – 6" X ½" 3000# PER ASTM A-105 GRADE B	9441652 12-6X3/4	NON STOCK
	10" – 6" X 1" 3000# PER ASTM A-105 GRADE B	9441656 10-6X1	NON STOCK
	36" – 12" X 1" 3000# PER ASTM A-105 GRADE B	9420532 36-12X1	NON STOCK
	2" X 1" 3000# PER ASTM A-105 GRADE B	NON STOCK	9307678 2X1
	10" – 8" X 1" 3000# PER ASTM A-105 GRADE B	NON STOCK	9307695 10-8X1
	36"-14" X ¾" 3000# PER ASTM A-105 GRADE B	NON STOCK	9307677 36-14X34
13	VALVE		
13A	VALVE (OPTIONAL – TO SHUT OFF TEST ASSEMBLY)		
14	LUG ASSEMBLY		
	7/8" x 24" LONG (LI ONLY - SEE MAIN-6210)	9342211	NON STOCK
	7/8" x 30" LONG (LI ONLY - SEE MAIN-6210)	9342212	NON STOCK
	LUG GREEN 1" - STAIN 7/8" DIAM. (NYC ONLY – SEE MAIN-630 & MAIN-6230)	9579304	NON STOCK
	LUG YELLOW 10"- 30" MAIN 1-1/16" DIAM. (NYC ONLY – SEE MAIN-6230& MAIN-6230)	9579905	NON STOCK
	ROD ½" X 12" LONG (NYC ONLY)	9328152	NON STOCK
	ROD 1" X 12" LONG (NYC ONLY)	9328150	NON STOCK
	LUG ASSEMBLY ½"X 30" LONG	NON STOCK	9315741
15	COUPLING – END 2" PERFECTION	NON STOCK	0603641
16	TEST CAP		
	FOR SADDLE FUSION TEE – CENTRAL PLASTICS	9325109	TOOL ROOM
	FOR SADDLE FUSION TEE – JM EAGLE / POLY UPONOR	#9309417	ITEM
	FOR SADDLE FUSION TEE – PERFORMANCE PIPE TEES	9341368	
	FOR HVTT (HIGH VOLUME TAPPING TEE) SADDLE FUSION CENTAL PLASTICS	9384268	
	FOR HVTT (HIGH VOLUME TAPPING TEE) SADDLE FUSION– JM EAGLE / POLYI UPONOR	9384174	
	FOR HVTT (HIGH VOLUME TAPPING TEE) SADDLE FUSION PERFORMANCE PIPE TEES	9322715	
	FOR HVTT ELECTROFUSION TEE	9382494	
	FOR RESTRICTION FITTING TEE	9381648	
	FOR RESTRICTION FITT / MECHANICAL TEE (CAP FITS ALL MAIN SIZE & OUTLET SIZES OF FMTTS)	9339561	

UNCONTROLLED WHEN PRINTED 6 OF 6 © National Grid Gas plc 2021 – All Rights Reserved
Effective Date 2/15/2021 CS-MAIN004

THE DDS COMPANIES
45 HENDRIX ROAD
WEST HENRIETTA, NY 14586
PHONE (585) 359-7540
FAX (585) 359-7541

BOSTON GAS COMPANY
d/b/a
nationalgrid
40 SYLVAN ROAD
WALTHAM, MA 02451

IFC

RE STAMP:
11/28/22
MARK E. PETROSKI
CIVIL
NO. 24868
COMMONWEALTH OF MASSACHUSETTS

NO.	DESCRIPTION	DATE	DR.BY	CK.BY	APP.BY
B	REVISED BILL OF MATERIALS	0 10/9/2023	CJV	DMJ	MEP
A	ISSUED FOR CONSTRUCTION	1 11/29/2022	CJV	DMJ	MEP

75 PLEASANT ST
GAS MAIN EXTENSION
TYLER TER
NEWTON, MA

STANDARD DETAILS

DWG SIZE	DESIGNER	ENGINEER	DATE:	ASSET I.D.	W.O. NO.:
22"X34"	DDS COMPANIES	C. VARGAS	11/29/2022	XXXXXXXX	1502891

PAGE 05 OF 07

DRAWING NO.	SHEET NO.
C-201	05

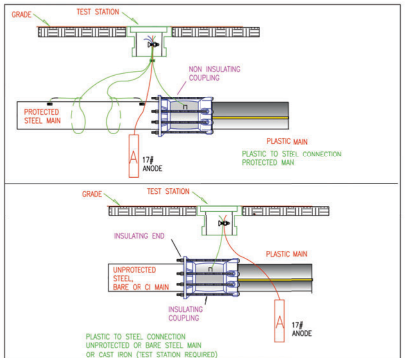

NOTES:

1. FOR COUPLING ITEM ID'S SEE FITS-6025
2. INSTALL ANODE PER 030024-CS AND TEST STATION PER 030026-CS
3. COAT COUPLING PER FACILITY COATING GUIDE (030031-CS)
4. IF A METALLIC COUPLING (NON INSULATING OR INSULATING) IS USED TO JOIN PLASTIC TO PLASTIC IN AN EMERGENCY, AN ANODE AND TEST STATION SHALL BE INSTALLED.

nationalgrid — ALL REGIONS

ELECTRICAL ISOLATION REQUIREMENTS OF A METALLIC COUPLING INSTALLED TO TIE IN A PLASTIC PIPE TO A METALLIC PIPE

REVISIONS: NEW DRAWING

DATE: 05/05/2020 | EFFECTIVE DATE: 05/05/2020
DESIGN: PAUL GUGLIOTTA | STD. DWG. NO. 030016-CS
DRAWN: PAUL GUGLIOTTA

SHEET 1 OF 1

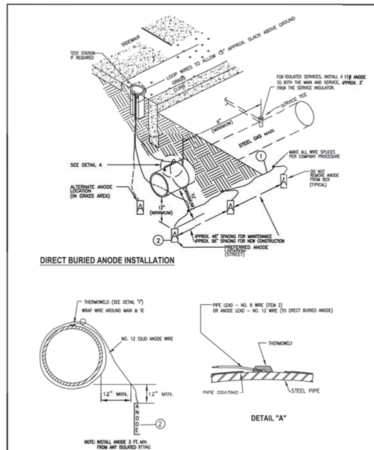

nationalgrid — ALL REGIONS

INSTALLATION OF MAGNESIUM ANODES

REVISIONS: UPDATED NEW SP ITEM ID'S

DATE: 07/15/2010 | EFFECTIVE DATE: 06/08/2020
DESIGN: PG | STD. DWG. NO. 030024-CS
APPROVAL: PS

SHEET 1 OF 2

MATERIAL LIST

	Description	Down State NY Item I.D	Upstate NY Item I.D	New England Item I.D	Rhode Island Item I.D	MATERIAL NOTES
1	CABLE NO. 8 – 1/C	9334425	9311214	9334425	9311214	Upstate and RI cable has 19 strands
2	ANODE, MAGNESIUM 17 LB	9311183	9311183	9311183	9311183	
3	ANODE, MAGNESIUM 3 LB	9315645	9315645	9315645	9315645	Use on Tracer wire and all isolated fittings.
4	ANODE, MAGNESIUM SPIKE 3 LB	9308624	9308624	9308624	9308624	Use on Service Risers ONLY
*	CLAMP, GROUNDING 1/2IN - 1IN DIA.	9386544	9386544	9386544	9386544	Grounding clamp for attaching spike anode lead wire to service riser
*	CLAMP, GROUNDING 1-1/4IN - 2IN DIA.	9386559	9386559	9386559	9386559	Grounding clamp for attaching spike anode lead wire to service riser

* Spike Anode Ground Clamp

SHT. 2 OF 2 030024-CS

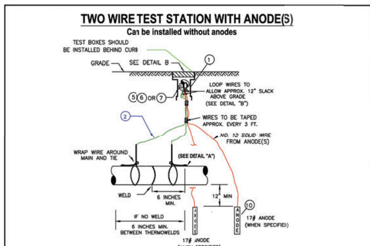

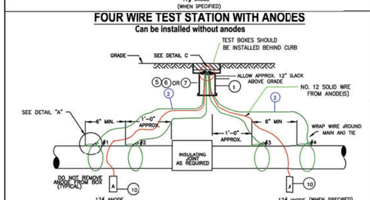

nationalgrid — ALL REGIONS

INSTALLATION OF TEST STATIONS FOR CATHODIC PROTECTION

REVISIONS: REVISED USING SAP ITEM ID'S

DATE: 07/15/2010 | EFFECTIVE DATE: 09/15/2013
DESIGN: PG | STD. DWG. NO. 030026-CS
APPROVED: PS

UNCONTROLLED WHEN PRINTED — 1 OF 5

© National Grid Gas plc 2013– All Rights Reserved

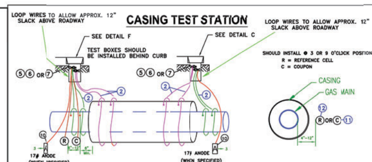

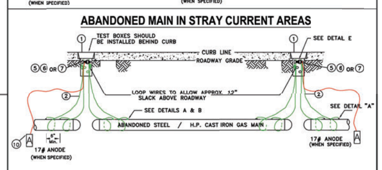

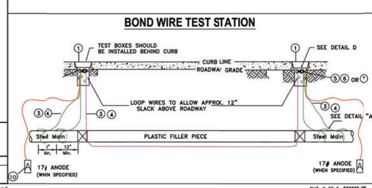

SHT. 2 OF 5 030026-CS

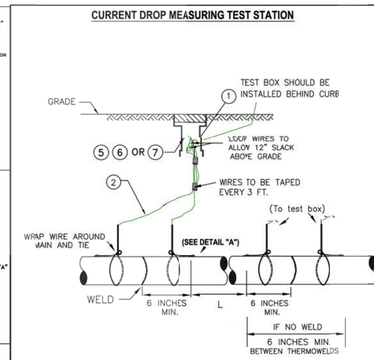

CURRENT DROP MEASURING TEST STATION SPACING

PIPE DIAMETER	"L"
3/4" – 4"	75'
6" – 10"	100'
12" AND OVER	125'

SHT. 3 OF 5 030026-CS

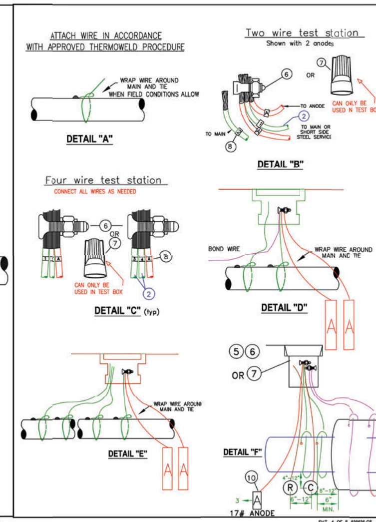

SHT. 4 OF 5 030026-CS

MATERIAL LIST

	Description	Down State SAP Item I.D	Upstate SAP Item I.D	New England SAP Item I.D	Rhode Island SAP Item I.D	MATERIAL NOTES
1	TEST BOX WITH COVER	9339892	9312291 UPSTATE BOXES COME IN ONE PIECE	9339892	(Sm - 445) 9311209 or (Lg - 556) in Prov. 9311208	NON LOCKING COVER. DISCARD FOOTPIECE.
	TEST BOX 9" SQUARE HEAVY DUTY	9339391		9339391		WEIGHS 95 LBS, STREET USE, WITHOUT COVER
	COVER FOR 9" SQUARE BOX	9339797		9339797		NON-LOCKING COVER
2	WIRE, NO. 8, 7 STRAND	9307539	9307539	9307539	9307539	TEST WIRE ONLY, NOT FOR GROUND BEDS, UPSTATE AND RI WIRE HAS 19 STRANDS.
3	WIRE, NO. 6, 7 STRAND	9311795	9311795	9311795	9311795	BOND WIRE ONLY, NOT FOR GROUND BEDS
4	WIRE 1/0 – 19 STRAND 600 V –1/C	9334171	NON STOCK	9334171	NON STOCK	USE IN STRAY CURRENT AREAS
5	TAPE, PVC - ¾" WIDE	9334056	9316070	9334056	9316070	NOT FOR PIPE COATING.
6	CONNECTOR, SPLIT BOLT, TYPE 6	9331578	9316630	9331578	NON STOCK	USE WITH NO. 6 CABLE
	CONNECTOR, SPLIT BOLT, TYPE 1/01	9331612		9331612		USE WITH 1/0 CABLE
7	CONNECTOR, TWIST-ON WIRE NUT	9330683	9314631	9330683	9314631	
8	TAG, ADHESIVE NUMBER 1 NUMBER 2 NUMBER 3 NUMBER 4 LETTER A	9307918 9307896 9307895 9307894 9307893	9307918 9307896 9307895 9307894 9307893	9307918 9307896 9307895 9307894 9307893	9307918 9307896 9307895 9307894 9307893	LABEL WITH #1 (N) OR (E), CONSECUTIVELY TO (S) OR (W) SEE DETAILS "B" AND "C" USE TO LABEL ANODES
9	GROUNDING CELL	NON STOCK	9315642	NON STOCK	NON STOCK	AS SPECIFIED BY CORROSION ENGINEERING
10	ANODE, MAGNESIUM 17LBS	9311183	9311183	9311183	9311183	SATURATE WITH WATER BEFORE BACKFILL. ANODE MAY BE INSTALLED VERTICALLY OR HORIZONTALLY.
11	COUPON	9386100	By Corrosion	9386100	By Corrosion	MC MILLER OR EQUAL
12	REFERENCE CELL	9385758	By Corrosion	9385758	By Corrosion	BORIN MFGR INC OR EQUAL

UNCONTROLLED WHEN PRINTED Effective Date 06/08/2020 — 5 OF 5

© National Grid Gas plc 2020– All Rights Reserved 030026-CS

NOTE:

1. CATHODIC PROTECTION DETAILS ARE NOT COVERED UNDER PE STAMP.

THE DDS COMPANIES
45 HENDRIX ROAD
WEST HENRIETTA, NY 14586
PHONE (585) 359-7540
FAX (585) 359-7541

BOSTON GAS COMPANY d/b/a nationalgrid
40 SYLVAN ROAD
WALTHAM, MA 02451

IFC

PE STAMP:

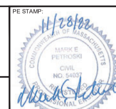

NO.	DESCRIPTION	DATE	DR.BY	CK.BY	APP.BY
B	REVISED BILL OF MATERIALS	01/09/2023	CJV	DMJ	MEP
A	ISSUED FOR CONSTRUCTION	11/29/2022	CJV	DMJ	MEP

75 PLEASANT ST
GAS MAIN EXTENSION
TYLER TER
NEWTON, MA

STANDARD DETAILS

DWG SIZE	DESIGNER	ENGINEER	DATE:	ASSET I.D.	W.O. NO.:
22"X34"	DDS COMPANIES	C. VARGAS	11/29/2022	XXXXXXXX	1502891

DRAWING NO.	SHEET NO.
C-202	06

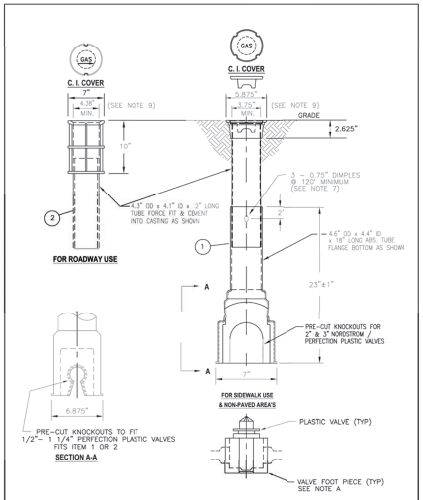

nationalgrid
LI-MA-NYC

VALVE BOXES UP TO 8" VALVES AND ALL RISER RINGS

REVISIONS: ADDED ITEM 16. REVISED #445 COVERS WITH ARROW TERMINOLOGY. ADDED UNIDIRECTIONAL ARROW ON ITEM 1.

DATE: 07/01/2003 | DESIGN: A. GULIANI/MAM | DRAWN: J. CASTALUCCI, P. DIMAIO | EFFECTIVE DATE: 09/15/2014 | STD. DWG. NO. FITS-6370

SIZE *	A	B OD.	B I.D.	C O.D.	C I.D.	D	E	F	G
SERVICE VALVE TEE	7	4.3	4.1	4.6	4.4	19	4.375	10	17.5
2"-4" VALVE	7	4.3	4.1	4.6	4.4	19	4.375	10	9
6" VALVE	8.25	6.25	-	6.7	6.3	24	5.75	10	11.5
8" VALVE	8.25	6.25	-	6.7	6.3	24	5.75	10	24

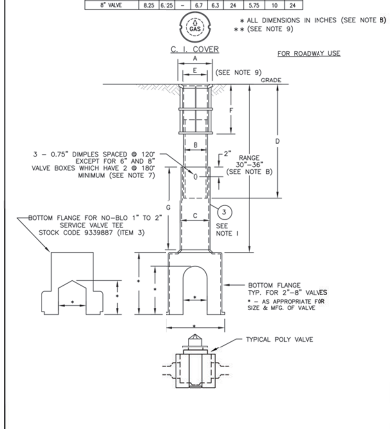

© National Grid Gas plc 2014– All Rights Reserved

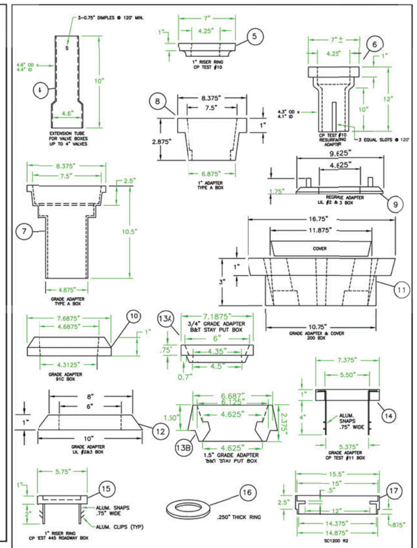

© National Grid Gas plc 2014– All Rights Reserved

INSTALLATION NOTES:

A. VALVE FOOT PIECE TO BE INSTALLED AROUND THE VALVE THEN INSERTED INTO THE BOTTOM FLANGE OF THE VALVE BOX.

B. THE RANGE OF THE VALVE BOX, FROM TOP OF GRADE TO TOP OF VALVE, IS 24" TO 38". FOR DEEPER VALVES USE EXTENSION TUBE STOCK CODE 00308023.

C. THESE BOXES CAN ALSO BE USED WITH THE APPROPRIATE SIZE STEEL VALVE. IF USED WITH A STEEL VALVE THE "VALVE FOOT PIECE" IS NOT TO BE USED; HOWEVER, PRIOR TO BACKFILLING INSTALL THE LOWER PORTION OF THE VALVE KEY ON THE VALVE OPERATING NUT. THEN PLACE THE LOWER SECTION OF THE BOX ON THE VALVE. WHEN THE BOTTOM SECTION IS BACKFILLED TO WITHIN 6" FROM ITS TOP REMOVE THE VALVE KEY & INSTALL THE TOP SECTION OF THE BOX.

D. ITEM 2 SHALL ONLY BE USED IN SIDEWALK AND NON-PAVED, NON TRAFFIC AREA EXCEPT DRIVEWAYS.

E. USE ITEM 1 ON MAIN LINE VALVES INSTALLED IN PAVED AND NON PAVED AREAS.

F. AFTER INSTALLATION OF MAIN LINE VALVE & BOX NOTIFY GSO OF COMPLETION.

MANUFACTURING NOTES:

1. ALL TOPS & BOTTOMS SHALL BE INTERCHANGEABLE.
2. THE TOP OF THE BOX ASSEMBLY SHALL BE FABRICATED SO AS TO FIT INSIDE THE BOTTOM SECTION.
3. MATERIAL SHALL CONFORM TO ASTM SPECIFICATIONS FOR GREY CAST IRON CASTINGS, DESIGNATED A48, CLASS 25.
4. COVER SHALL CREATE A TIGHT FIT WITH TOP OF CASTING TO PREVENT RATTLING. FOR CODES 00308054 & 00308055 COVER SHALL BE OF VENTED DESIGN. FOR OTHER STOCK CODES THE COVER SHALL INCLUDE A DIRECTIONAL ARROW. THIS SHALL BE DESIGNED TO ALLOW THE ARROW TO BE POSITIONED AT 60 INTERVALS.
5. ALL SURFACES SHALL BE COVERED WITH ONE COAT OF FLINTKOTE HYDALT PROTECTIVE COATING, C-13-E OR APPROVED EQUAL.
6. THE PLASTIC USED FOR THE TUBES SHALL BE PROTECTED FROM UV RAYS & AND HAVE THE PROPER INHIBITORS TO PROTECT FROM BRITTLENESS AT ZERO DEGREES.
7. DIMPLES SHALL BE FORMED SO AS TO EXERT ENOUGH PRESSURE ON INNER TUBE TO SUPPORT ENTIRE ASSEMBLY IN EXTENDED POSITION.
8. DIMENSIONAL TOLERANCES: MANUFACTURE SHALL ADHERE TO THE FOLLOWING DIMENSIONAL TOLERANCES ALL PLASTIC TUBING SHALL BE +/- 0.015" TO THOSE SHOWN ON THE DRAWING. ALL CASTINGS SHALL BE MANUFACTURED TO WITHIN +/- 0.0625" TO THE DIMENSIONS SHOWN ON THE DRAWING.
9. DIMENSIONS SHALL BE CONSISTENT THROUGHOUT THE CASTING.
10. TOP SECTION OF VALVE BOX SHALL HAVE THE PLASTIC TUBE FORCED FIT AND CEMENTED INTO THE CASTING. THIS JOINT SHALL BE CAPABLE OF WITHSTANDING A PULL OUT FORCE OF 20 POUNDS.
11. MANUFACTURER SHALL SUBMIT SAMPLES TO THE ENGINEER FOR APPROVAL PRIOR TO BID ACCEPTANCE.
12. STREET BOXES SHALL BE DESIGNED TO HANDLE TO AN H-20 ROADWAY LOADING.
13. TOP FLANGE OF ROADWAY BOX SHALL BE FLAT AND WIDE ENOUGH TO ACCOMMODATE A 3/8" METAL NUMBER STAMP EMBEDDED INTO THE CASTING BY CKD IN THE FIELD.
14. THE VALVE FOOT PIECE SHALL BE DESIGNED TO FIT THE FOLLOWING MANUFACTURER'S VALVES.
    ½"- 1 ¼" - PERFECTION
    2" - NORDSTROM OR PERFECTION UNIVERSAL FOOT PC FOR BOTH MFG.
    4" - 8" NORDSTROM

© National Grid Gas plc 2014 – All Rights Reserved FITS-6370

No.	ITEM	N.G. CODE No.
18	PENTAGON KEY FOR ITEMS 8B AND 11B (NOT SHOWN)	9354644
17	2" REGRADE ADAPTER FOR 12" LOCKING BOX SC120 R2	9384175
16	VALVE BOX ADAPTER RING, 1/4 INCH THICK X 7-5/8 INCH I.D. X 10-1/2 IN O.D. FLAT RING TO RAISE OLD LEGACY OBSOLETE LILCO ROUND CASTINGS	9353359
15	ONE INCH GRADE ADAPTER & COVER FOR CP TEST#445 ROADWAY BOX - NH ONLY	9383913
*	REPLACEMENT COVER FOR LIL #2 BOX - LI ONLY COVER MARKED "GAS" FOR 445 BOX (WITH UNIDIRECTIONAL ARROW) COVER MARKED "GAS" FOR 445 BOX (WITHOUT UNIDIRECTIONAL ARROW) COVER MARKED "GAS" FOR 4" STAY PUT BOX - NYC ONLY COVER MARKED "GAS" FOR #11B BOX COVER MARKED "GAS" FOR #10 BOX RESURFACE REPAIR SLEEVE RING	9339829 9339828 9388350 9339759 9339858 9339762
14	1" REGRADE ADAPTER WITH COVER FOR CP TEST #11B BOX - SEE NOTE B	9382611
13A 13B	¾" REGRADE ADAPTER FOR B&T STAY PUT SERVICEBOX WITH SLOTS NYC ONLY 1-½" REGRADE ADAPTER FOR B&T STAY PUT SERVICE BOX WITH SLOTS NYC ONLY	9339800 9339725
12 *	1" REGRADE ADAPTER FRAME FOR THE LIL# 2 & 3 VALVE BOX. COVER FOR ABOVE (NOT SHOWN) - LI ONLY	9339859 9339860
11B	COVER, REPLACEMENT, LOCKING, MARKED "GAS" FOR EXISTING LOCK TYPE 200 BOX, WITH PENTHEAD BOLT - LI ONLY (NOT SHOWN)	9384338
11A	COVER, REPLACEMENT, NON-LOCK, MARKED "GAS" FOR EXISTING NON-LOCK TYPE 200 BOX - LI ONLY (NOT SHOWN)	9339798
11	1" REGRADE ADAPTER FRAME & COVER FOR 200 VALVE BOX - LI ONLY	9339826
*	2-1/2" REGRADE ADAPTER FOR 200 VALVE BOX. FITS EXISTING COVER. (NOT SHOWN) - LI ONLY	9339799
10	1" REGRADE ADAPTER & COVER FOR 91C BOX - LI ONLY	9339761
9	1 ½" REGRADE ADAPTER FOR LIL 2&3 BOX - LI ONLY	9339758
8B	COVER, REPLACEMENT, LOCKING, MARKED "GAS" FOR 7-1/2" EXISTING TYPE "A" LOCK VALVE BOXES, WITH PENTHEAD BOLT - LI ONLY (NOT SHOWN)	9339760
8A	COVER, REPLACEMENT, MARKED "GAS" FOR 7-1/2" EXISTING TYPE "A" NON-LOCK VALVE BOXES AND ALL TYPE "A" ADAPTER RINGS - LI ONLY (NOT SHOWN)	9384430
8	1" REGRADE ADAPTER FOR TYPE "A" VALVE BOX. FITS EXISTING COVER. - LI ONLY	9339827
7	2-½" REGRADE ADAPTER FOR TYPE "A" VALVE BOX 2-1/2 IN MIN TO 8 IN MAX RISE. FITS EXISTING COVER. - LI ONLY	9339763
6	1" REGRADE ADAPTER RING EXTENSION WITH 10" PLASTIC SKIRT TO REPAIR TOPS OF CP TEST #10 BOX	9381407
5	1" REGRADE ADAPTER FOR CP TEST #10 BOX	9339823
4	EXTENSION TUBE – FOR CP TEST #11 BOX EXTENSION TUBE - FOR CP TEST #10 BOX	9382619 9339824
*	EXTENSION TUBE, FOR CP TEST #558 BOX, 18" LONG – (NOT SHOWN) - NE ONLY EXTENSION TUBE, FOR CP TEST #334 BOX, 24" LONG – (NOT SHOWN) - NE ONLY	9383199 9383198
3	ROADWAY BOX ASSEMBLY AND COVER FOR 8" POLYVALVE CP TEST #11B OR APPV'D EQUAL ROADWAY BOX ASSEMBLY AND COVER FOR 6" POLYVALVE CP TEST 11B OR APPV'D EQUAL ROADWAY BOX ASSEMBLY AND COVER FOR 4" POLYVALVE CP TEST #10 OR APPV'D EQUAL ROADWAY BOX ASSEMBLY AND COVER FOR 2" AND 1" POLYVALVES CP TEST #10 OR APPR'D EQUAL ROADWAY BOX ASSEMBLY AND COVER FOR 1"- 2" MUELLER SERVICE VALVE TEE CP TEST #10 OR APPV'D EQUAL	9339893 9339892 9339891 9339890 9339887
2	ROADWAY SERVICE BOX AND COVER FOR ½" TO 1" PLASTIC VALVE NE ONLY CP TEST #10 OR APPV'D EQUAL	9382767
1	SIDEWALK VALVE BOX ASSEMBLY AND UNIDIRECTIONAL ARROW COVER FOR ½" TO 1 ¼" PLASTIC VALVES CP TEST #445 OR APPR'D EQUAL SIDEWALK VALVE BOX ASSEMBLY AND UNIDIRECTIONAL ARROW COVER FOR 2" TO 3" PLASTIC VALVES CP TEST #445 OR APPROVED EQUAL	9339888 9339889

BILL OF MATERIAL

© National Grid Gas plc 2014 – All Rights Reserved FITS-6370

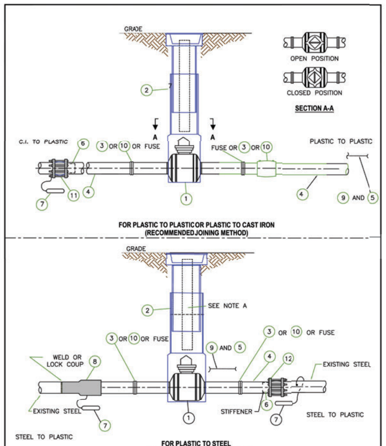

nationalgrid
ALL REGIONS

2"-12" PE VALVE TYPICAL INSTALLATION

REVISIONS: UPDATED ITEM ID'S

DATE: 07/01/2003 | DESIGN: AJG / MAM | DRAWN: P. DIMAIO | EFFECTIVE DATE: 06/09/2020 | STD. DWG. NO. VALV-6020

© National Grid Gas plc 2020– All Rights Reserved

NOTES:
A. IN DNY LI REGION, INSTALL A LENGTH OF 2" DIAMETER PE OR SMALLER TUBING IN THE VALVE BOX TO IDENTIFY THE VALVE AS PLASTIC.
B. INSTALL TRACER WIRE OR BALL MARKERS AS REQUIRED IN YOUR REGION FOR PE INSTALLATIONS.
C. NOT USED ON THE DNY LI 99 & 124 PSI PE SYSTEM.
D. REFER TO REGIONAL STANDARDS FOR MATERIAL IDS NOT GIVEN BELOW.

No.	ITEM	SAP ID	SAP ID	SAP ID
1	VALVE, PE (PORT CONFIGURATION AS NOTED)	UNY AND RI LP TO 100 PSIG HD 9311203 12" DR 11 FULL PORT W/ GEAR OPERATOR RI ONLY 9307909 12" DR 13.5 FULL PORT W/ GEAR OPER UNY ONLY 9311173 8" DR 11 FULL PORT RI ONLY 9315189 8" DR 13.5 FULL PORT UNY ONLY 9312116 6" DR 11 FULL PORT 9312058 4" DR 11 FULL PORT 9308061 3" DR 11 FULL PORT RI ONLY 9312060 2" DR 11 FULL PORT 9311146 2" DR 11 FULL PORT WITH PERMASERT ENDS	LI ONLY 99 AND 124 PSIG HD 9341706 8" RED PORT DR 9 9341705 6" RED PORT DR 9 9341700 4" RED PORT DR 9 9341699 2" FULL PORT DR 9	LI, NYC AND NE LP TO 60 PSIG MEDIUM DENSITY 934170- 12" FULL PORT DR 13.5 938659- 8" FULL PORT DR 13.5 9323032 6" FULL PORT DR 11.5 9341709 4" FULL PORT DR 11.5 9323299 3" FULL PORT DR 11 934178- 2" FULL PORT DR 11 9341408 8" RED PORT DR 13.5 9341757 6" RED PORT DR 11.5 9341693 4" RED PORT DR 11.5 9341756 3" RED PORT DR 11 100 PSIG HIGH DENSITY (NE ONLY) 9323610 4" RED PORT DR 11 9323611 6" RED PORT DR 11 9323612 8" RED PORT DR 11 9312060 2" FULL PORT DR 11 9312058 4" FULL PORT DR 11 9312116 6" FULL PORT DR 11
2	ROADWAY VALVE BOX WITH COVER	SELECT ROADWAY VALVE BOX BELOW TO MATCH SIZED VALVE GIVEN SEE DWG FITS 6360 (FOR 12" VALVE) 9311208 (FOR 2" THRU 8" VALVE)	SELECT ROADWAY VALVE BOX BELOW TO MATCH SIZED VALVE GIVEN 9341706 8" RED PORT 9341705 6" RED PORT 9341700 4" RED PORT 9341699 2" FULL PORT	SELECT ROADWAY VALVE BOX BELOW TO MATCH SIZED VALVE GIVEN 9382626 FOR 12" FULL PORT 9382626 FOR 8" FULL PORT 9339893 FOR 6" FULL PORT 9339892 FOR 4" FULL PORT 9339890 FOR 3" FULL PORT 9339890 FOR 2" FULL PORT 9339893 FOR 8" RED PORT 9339892 FOR 6" RED PORT 9339891 FOR 4" RED PORT 9339891 FOR 3" RED PORT
3	COUPLING ELECTROFUSE			
4	PLASTIC PIPE			
5	BURIAL TAPE			
6	INSERT STIFFENER (SEE NOTE C)			
7	ANODE, 17 LB			
8	TRANSITION FITTING STL TO PE			
9	TRACER WIRE OR (BALL MARKER IF USED IN REGION)			
10	COUPLING 2" PERFECTION PERMASERT (SEE NOTE C)			
11	COUPLING, PE TO CI, LOCKING INSULATING, MECHANICAL			
12	COUPLING, PE TO STL, LOCKING, NON-INSULATING MECHANICAL (SEE NOTE C)			

© National Grid Gas plc 2020 – All Rights Reserved VALV-6020

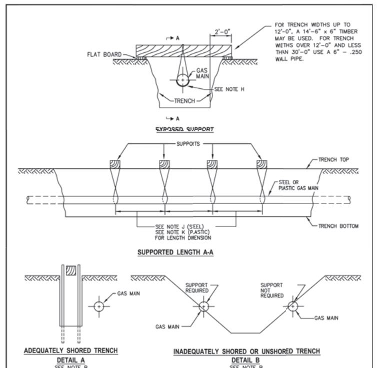

nationalgrid
LI-MA-NYC

SUPPORT REQUIREMENTS FOR EXPOSED & UNDERMINED STEEL OR PLASTIC GAS FACILITIES

REVISIONS: UPDATED SAP ID# AND NOTE N

DATE: 07/01/2003 | DESIGN: A. GIULIANI | DRAWN: P. DIMAIO | EFFECTIVE DATE: 03/07/2018 | STD. DWG. NO. CNST-6045

NOTES:

A. THIS CONSTRUCTION STANDARD SHALL BE USED TO SUPPORT PLASTIC OR STEEL GAS FACILITIES WHICH ARE UNDERMINED AND EXPOSED BY CONSTRUCTION ACTIVITY.

B. IF AN EXCAVATION IS MADE AT ANY DISTANCE PARALLEL TO THE GAS FACILITY WITH ADEQUATE OSHA STRUCTURAL SHORING, AS SHOWN IN DETAIL "A", OR IF A STABLE SOIL CONDITION WITH SUFFICIENT COVER ABOVE THE PIPE'S CENTERLINE EXISTS, AS SHOWN IN DETAIL "B", THEN SUPPORTS ARE NOT REQUIRED. UNSTABLE SOIL IS DEFINED AS A SOIL WHICH CAN CAUSE "SOIL RUN OUT" FROM BENEATH THE PIPE (e.g., WASHOUT, SOFT CLAY, etc.) OR CAN SHIFT DUE TO CONSTRUCTION ACTIVITY, VIBRATIONS, etc.; AND CAUSE A SOIL SCENARIO TO OCCUR AS SHOWN IN DETAIL "B" TO REQUIRE PIPE SUPPORT.

C. IF AN EXCAVATION CROSSES OR RUNS PARALLEL TO A GAS FACILITY, SUPPORTS MAY NOT BE REQUIRED IF THE EXPOSED SECTION OF PLASTIC PIPES IS 3' OR LESS AND STEEL PIPES 7' OR LESS.

D. ALL EXCAVATIONS SHALL BE PERFORMED IN ACCORDANCE WITH THE REQUIREMENTS OF THE ONE CALL DIG SAFE PROGRAM USING THE APPROPRIATE MARK OUT, TEST HOLES AND EXCAVATION TO AVOID DAMAGE TO PIPE OR PIPE COATINGS:
- NEW YORK STATE CODE RULE 753
- MA CHAPTER 82 - SECTION 40, GENERAL LAWS, REGULATING NOTICE REQUIREMENTS FOR EXCAVATION IN PUBLIC WAYS

E. USE OF THIS CONSTRUCTION STANDARD DOES NOT RELIEVE THE CONSTRUCTION AGENCY OR AUTHORITY OR THEIR RESPECTIVE CONTRACTORS OF RESPONSIBILITY FOR DAMAGES. ALL DAMAGES WILL BE REPAIRED IN ACCORDANCE WITH EXISTING STANDARDS AND THE APPROPRIATE PARTY SHALL BE BILLED FOR ALL EXPENSES.

F. GAS FACILITIES SHOULD NOT BE UNDERMINED WITHOUT ADEQUATE SUPPORT (DETAIL A). ALL SUPPORT LINES SHALL BE TENSIONED SO THAT NO DEFLECTION WILL OCCUR WHEN THE FACILITY IS UNDERMINED. THIS TENSION SHALL BE CHECKED AT THE START AND END OF EACH DAY AND ADJUSTED AS NECESSARY.

G. WHERE A COUPLING, GAS SERVICE, CLAMP, VALVE, DRIP LINE OR OTHER APPURTENANCE EXISTS ON THE EXPOSED SECTION OF MAIN, AN ADDITIONAL SUPPORT SHALL BE INSTALLED AT THE LOCATION.

H. WHEN SUPPORTING AN EXPOSED FACILITY, THE PIPE COATING SHALL BE PROTECTED WITH ROCK SHIELD (ITEM ID 9340226), OR OTHER LIKE MATERIAL CUT TO A MINIMUM WIDTH OF ½ THE SUPPORTED PIPE DIAMETER SUPPORT LINES SHALL BE A MINIMUM OF ¾" POLYPROPYLENE OR BETTER. FRP SHEILDS MAY ALSO BE USED FOR THIS PURPOSE PROVIDED THEY EXTEND A MINIMUM OF ½ WAY UP THE PIPE TO PROTECT FROM SIDE LOADING.

I. SUPPORTS FOR GAS TRANSMISSION FACILITIES SHALL BE REVIEWED WITH GAS ENGINEERING PRIOR TO INSTALLATION.

J. THE MAXIMUM SPACING BETWEEN SUPPORTS FOR STEEL FACILITIES SHALL BE AS FOLLOWS:
7' SPACING FOR ¾" AND 1 ¼" STEEL
10' SPACING FOR 2" STEEL
15' SPACING FOR 3" AND 4" STEEL
20' SPACING FOR 6" AND LARGER STEEL

K. THE MAXIMUM SPACING BETWEEN SUPPORTS FOR PLASTIC FACILITIES SHALL BE AS FOLLOWS:
3' SPACING FOR 2" AND SMALLER PLASTIC
6' SPACING FOR 4" AND LARGER PLASTIC

L. VIBRATING MACHINES ARE ALLOWED OVER STEEL OR PLASTIC FACILITIES WITH 24" OR GREATER COVER. HAND HELD MECHANICAL TAMPER IS ACCEPTABLE OVER ANY FACILITY WITH 12" OR GREATER COVER.

M. WHEN CONSTRUCTION ACTIVITY IS COMPLETED, CLEAN FILL SHALL BE COMPACTED AROUND AND UNDER THE GAS FACILITY BEFORE REMOVING SUPPORTS.

N. SEE REGIONAL DAM01007-NYC-LI-UNY OR DAM-MA-RI PROCEDURES FOR REPLACEMENT REQUIREMENTS OF CAST IRON PIPE.

No.	ITEM	CODE No.

BILL OF MATERIAL

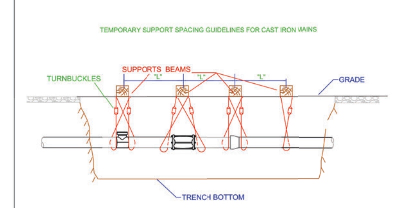

TABLE 1
SUGGESTED MAXIMUM PIPE SUPPORT SPACING "L"
SUGGESTED MAXIMUM SPAN

PIPE SIZE (INCHES)	CAST IRON (FEET)
1	-
2	-
3	4
4	4
6	4
8	4
12	6
16	6
20	6
24	6

NOTES:
1. WHERE A COMPRESSION COUPLING, GAS SERVICE, REPAIR CLAMP, VALVE, DRIP LINE OR ANY OTHER APPURTENANCE IS FOUND INSTALLED ON THE GAS MAIN, ADDITIONAL SUPPORT SHALL BE INSTALLED TO REINFORCE THE PIPING A THIS LOCATION.
2. CONTACT ENGINERING FOR ALTERNATE OR ADDITIONAL SUPPORT REQUIREMENTS.

nationalgrid
ALL REGIONS

Key Changes:

TEMPORARY SUPPORT SPACING GUIDELINES FOR CAST IRON MAINS

DATE: 2/15/2018 | DESIGN: ED MARIAN | DRAWN: PAUL GUGLIOTTA | EFFECTIVE DATE: 2/15/2018 | STD. DWG. NO. CNST6046

© National Grid Gas plc 2017– All Rights Reserved

THE DDS COMPANIES
45 HENDRIX ROAD
WEST HENRIETTA, NY 14586
PHONE (585) 359-7540
FAX (585) 359-7541

BOSTON GAS COMPANY
d/b/a
nationalgrid
40 SYLVAN ROAD
WALTHAM, MA 02451

IFC

PE STAMP: 11/28/22 COMMONWEALTH OF MASSACHUSETTS MARK E. PETROSKI CIVIL NO. 54037 REGISTERED PROFESSIONAL ENGINEER

NO.	DESCRIPTION	DATE	DR.BY	CK.BY	APP.BY
B	REVISED BILL OF MATERIALS	01/09/2023	CJV	DMJ	MEP
A	ISSUED FOR CONSTRUCTION	11/29/2022	CJV	DMJ	MEP

75 PLEASANT ST
GAS MAIN EXTENSION
TYLER TER
NEWTON, MA

STANDARD DETAILS

DWG SIZE	DESIGNER	ENGINEER	DATE:	ASSET I.D.	W.O. NO.:
22"X34"	DDS COMPANIES	C. VARGAS	11/29/2022	XXXXXXXX	1502891

DRAWING NO.	SHEET NO.
C-203	07