NOTES:

1. INFORMATION SHOWN ON THIS PLAN IS THE RESULT OF A FIELD SURVEY PERFORMED BY SPRUHAN ENGINEERING, P.C. AS OF 9/9/2022.

2. DEED REFERENCE: BOOK 59505, PAGE 350
PLAN REFERENCE 1: PLAN 1094 OF 1930
PLAN REFERENCE 2: PLAN 562 OF 1931
MIDDLESEX COUNTY SOUTH DISTRICT REGISTRY OF DEEDS

3. THIS PLAN IS NOT INTENDED TO BE RECORDED.

4. I CERTIFY THAT THE DWELLING SHOWN IS NOT LOCATED WITHIN A SPECIAL FLOOD HAZARD ZONE. IT IS LOCATED IN ZONE X, ON FLOOD HAZARD BOUNDARY MAP NUMBER 25017C0551E, IN COMMUNITY NUMBER: 250208, DATED 6/4/2010.

5. THIS PLAN DOES NOT SHOW ANY UNRECORDED OR UNWRITTEN EASEMENTS WHICH MAY EXIST. A REASONABLE AND DILIGENT ATTEMPT HAS BEEN MADE TO OBSERVE ANY APPARENT USES OF THE LAND; HOWEVER THIS NOT CONSTITUTE A GUARANTEE THAT NO SUCH EASEMENTS EXIST.

6. FIRST FLOOR ELEVATIONS ARE TAKEN AT THRESHOLD.

7. NO RESPONSIBILITY IS TAKEN FOR ZONING TABLE AS SPRUHAN ENGINEERING, P.C. ARE NOT ZONING EXPERTS. TABLE IS TAKEN FROM TABLE PROVIDED BY LOCAL ZONING ORDINANCE. CLIENT AND/OR ARCHITECT TO VERIFY THE ACCURACY OF ZONING ANALYSIS.

8. THE ELEVATIONS SHOWN ARE ON AN ASSUMED DATUM.

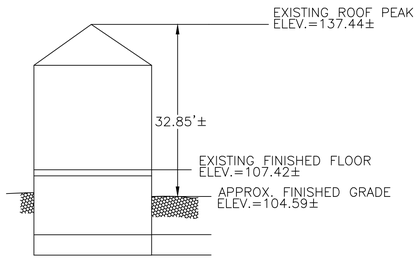

EXISTING PROFILE
NOT TO SCALE

AVERAGE GRADE PLAN

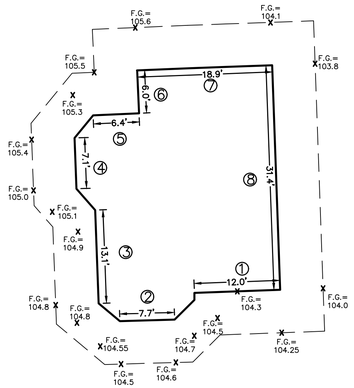

ZONING LEGEND

ZONING DISTRICT: SINGLE-RESIDENCE 3
(LOT CREATED BEFORE 12/07/1953)

	REQUIRED	EXISTING
MIN. AREA	7,000 S.F	7,706± S.F
MIN. FRONTAGE	70'	173.37'
MIN. YARD FRONT	25'	12.5'
SIDE	7.5'	18.2'
REAR	15'	53.1'
MAX. LOT COV.	30%	17.3%
MIN. OPEN SPACE	50%	70.12%

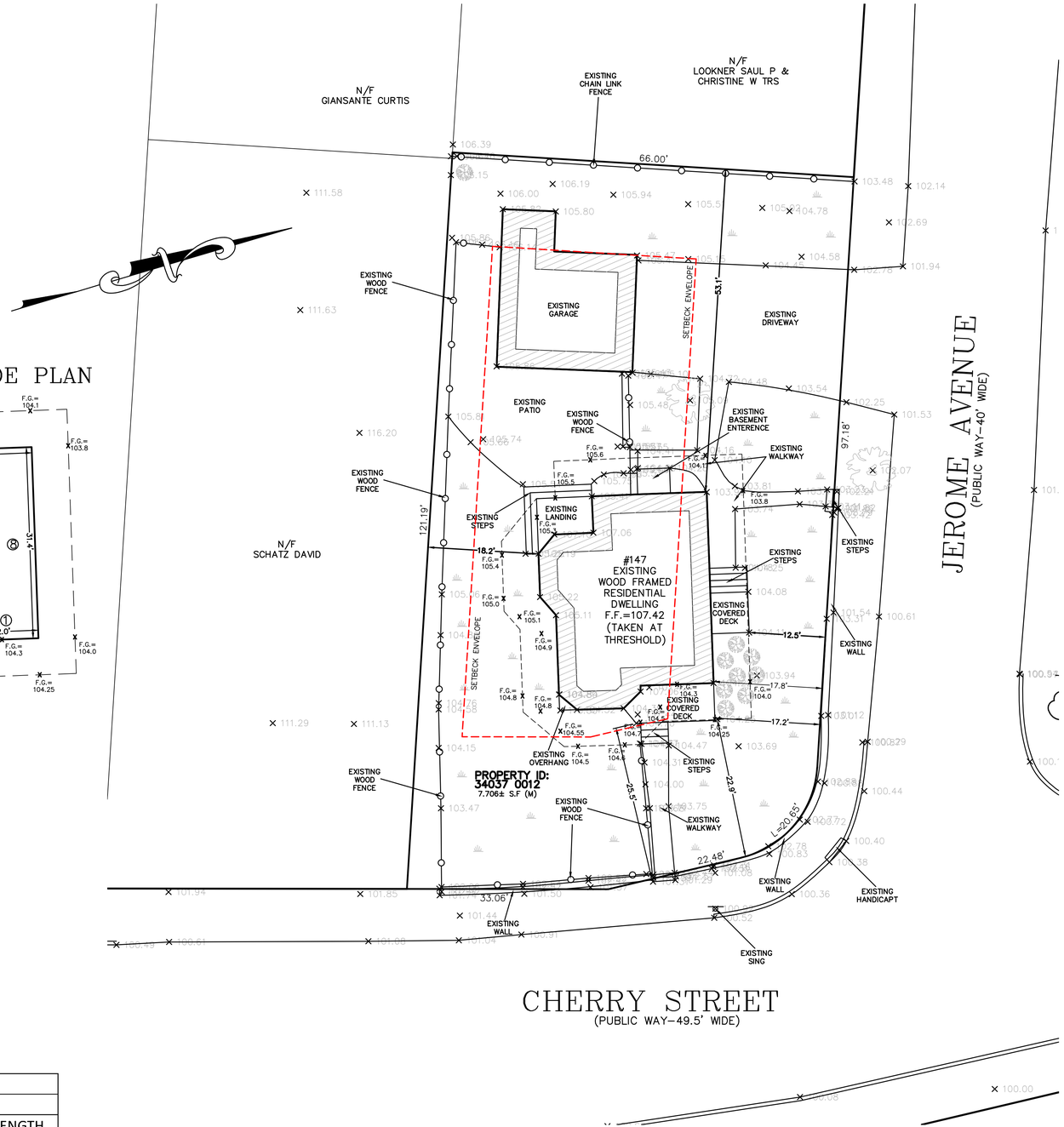

AVERAGE GRADE PLANE (ALL UNITS IN FEET)					
SEGMENT	LENGTH	POINT 1	POINT 2	MEAN 1 & 2	MEAN x LENGTH
1	12.00	104.22	105.00	104.61	1.255.32
2	7.70	104.30	104.52	104.41	803.96
3	13.10	104.82	105.11	104.97	1.375.04
4	7.10	105.22	105.19	105.21	746.96
5	6.40	105.10	105.06	105.08	672.51
6	6.00	105.06	105.41	105.24	631.41
7	18.90	105.41	103.93	104.67	1.978.26
8	31.40	103.93	104.22	104.08	3.267.96
SUM =	102.60				10.731.41
SUM OF MEAN x LENGTH/ SUM OF LENGTHS = AVERAGE GRADE PLANE =					**104.59**

GRAPHIC SCALE
10 0 5 10 20 40
(IN FEET)
1 inch = 10 ft.

Spruhan Engineering, P.C.
80 JEWETT ST, (SUITE 2)
NEWTON, MA 02458
Tel: 617-816-0722
Email:edmond@spruhaneng.com

147 CHERRY SREET
NEWTON
MASSACHUSETTS

SURVEY PLAN

REVISION BLOCK

DESCRIPTION	DATE

All legal rights including, but not limited to, copyright and design patent rights, in the designs, arrangements and plans shown on this document are the property of Spruhan Engineering, P.C. They may not be used or reused in whole or in part, except in connection with this project, without the prior written consent of Spruhan Engineering, P.C.. Written dimensions on these drawings shall have precedence over scaled dimensions. Contractors shall verify and be responsible for all dimensions and conditions on this project, and Spruhan Engineering, P.C., must be notified of any variation from the dimensions and conditions shown by these drawings.

COMMONWEALTH OF MASSACHUSETTS
CHRISTOPHER G. CHARLTON
NO. 48649
PROFESSIONAL LAND SURVEYOR

DATE:	9/16/2022
DRAWN BY:	O.S
CHECKED BY:	C.C
APPROVED BY:	E.S

PLOT PLAN

SHEET 1

NOTES:

1. INFORMATION SHOWN ON THIS PLAN IS THE RESULT OF A FIELD SURVEY PERFORMED BY SPRUHAN ENGINEERING, P.C. AS OF 9/9/2022.

2. DEED REFERENCE: BOOK 59505, PAGE 350
PLAN REFERENCE 1: PLAN 1094 OF 1930
PLAN REFERENCE 2: PLAN 562 OF 1931
MIDDLESEX COUNTY SOUTH DISTRICT REGISTRY OF DEEDS

3. THIS PLAN IS NOT INTENDED TO BE RECORDED.

4. I CERTIFY THAT THE DWELLING SHOWN IS NOT LOCATED WITHIN A SPECIAL FLOOD HAZARD ZONE. IT IS LOCATED IN ZONE X, ON FLOOD HAZARD BOUNDARY MAP NUMBER 25017C0551E, IN COMMUNITY NUMBER: 250208, DATED 6/4/2010.

5. THIS PLAN DOES NOT SHOW ANY UNRECORDED OR UNWRITTEN EASEMENTS WHICH MAY EXIST. A REASONABLE AND DILIGENT ATTEMPT HAS BEEN MADE TO OBSERVE ANY APPARENT USES OF THE LAND; HOWEVER THIS NOT CONSTITUTE A GUARANTEE THAT NO SUCH EASEMENTS EXIST.

6. FIRST FLOOR ELEVATIONS ARE TAKEN AT THRESHOLD.

7. NO RESPONSIBILITY IS TAKEN FOR ZONING TABLE AS SPRUHAN ENGINEERING, P.C. ARE NOT ZONING EXPERTS. TABLE IS TAKEN FROM TABLE PROVIDED BY LOCAL ZONING ORDINANCE. CLIENT AND/OR ARCHITECT TO VERIFY THE ACCURACY OF ZONING ANALYSIS.

8. THE ELEVATIONS SHOWN ARE ON AN ASSUMED DATUM.

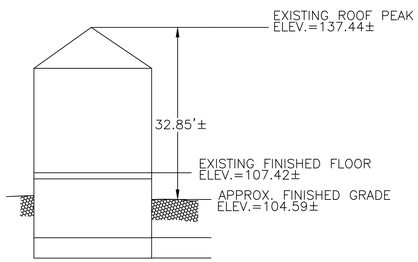

EXISTING PROFILE
NOT TO SCALE

AVERAGE GRADE PLAN

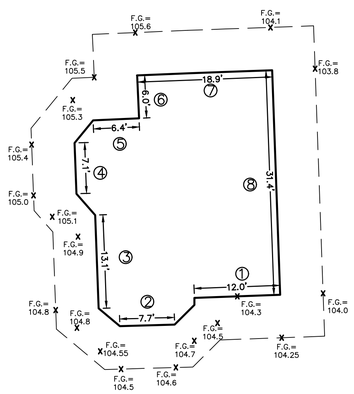

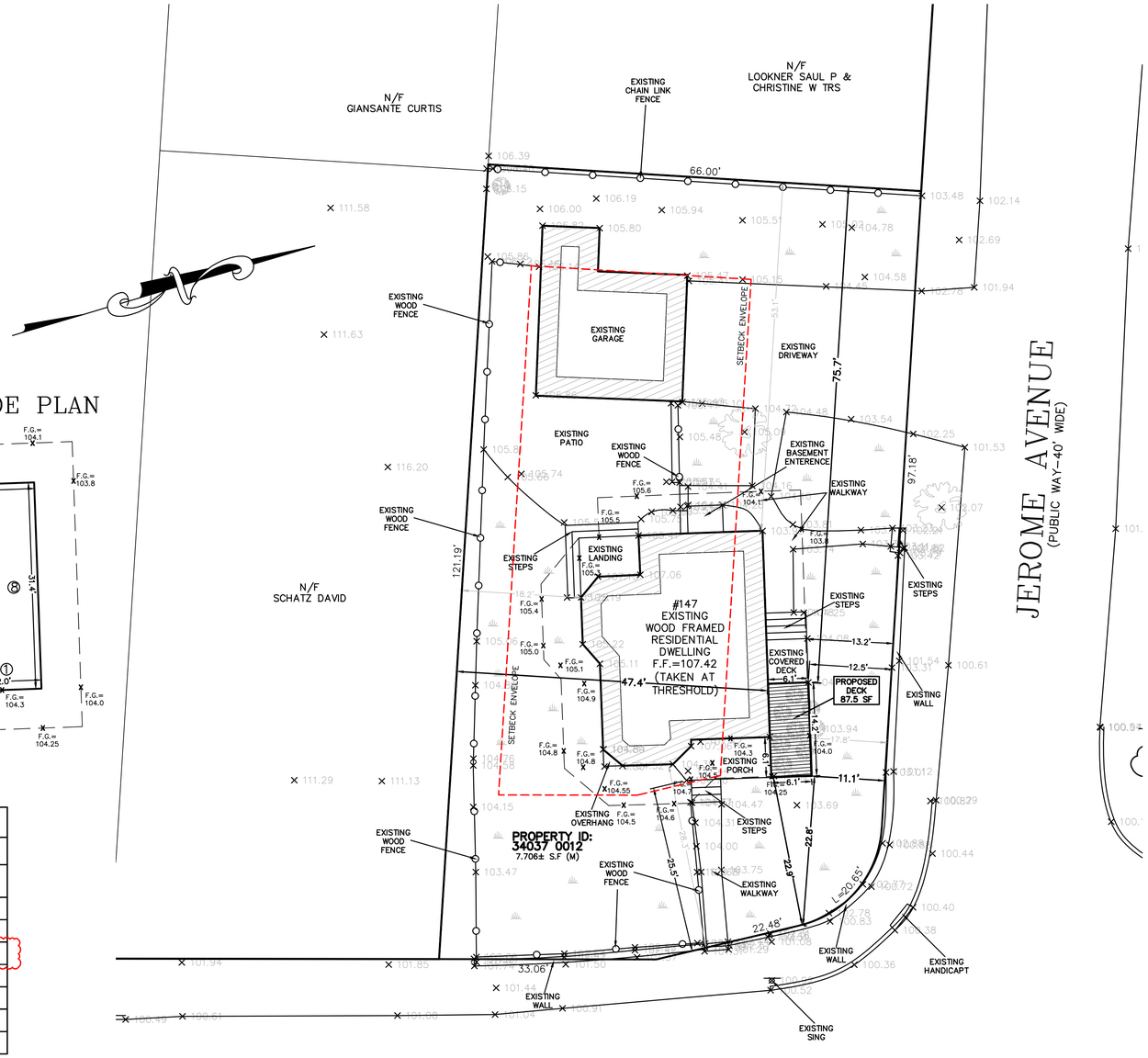

ZONING LEGEND

ZONING DISTRICT: SINGLE-RESIDENCE 3
(LOT CREATED BEFORE 12/07/1953)

	REQUIRED	EXISTING	PROPOSED	
MIN. AREA	7,000 S.F	7,706± S.F	7,706± S.F	NO CHANGE
MIN. FRONTAGE	70'	173.37'	173.37'	NO CHANGE
MIN. YARD FRONT	25'	28.3'	11.1'	VARIENCE
SIDE	7.5'	17.8'	47.4'	COMPLIES
REAR	15'	53.1'	75.7'	COMPLIES
MAX. LOT COV.	30%	17.3%	17.3%	NO CHANGE
MIN. OPEN SPACE	50%	70.12%	69%	COMPLIES

AVERAGE GRADE PLANE (ALL UNITS IN FEET)

SEGMENT	LENGTH	POINT 1	POINT 2	MEAN 1 & 2	MEAN x LENGTH
1	12.00	104.22	105.00	104.61	1.255.32
2	7.70	104.30	104.52	104.41	803.96
3	13.10	104.82	105.11	104.97	1.375.04
4	7.10	105.22	105.19	105.21	746.96
5	6.40	105.10	105.06	105.08	672.51
6	6.00	105.06	105.41	105.24	631.41
7	18.90	105.41	103.93	104.67	1.978.26
8	31.40	103.93	104.22	104.08	3.267.96
SUM =	102.60				10.731.41
SUM OF MEAN x LENGTH/ SUM OF LENGTHS = AVERAGE GRADE PLANE =					**104.59**

GRAPHIC SCALE

10 0 5 10 20 40

(IN FEET)
1 inch = 10 ft.

Spruhan Engineering, P.C.
80 JEWETT ST, (SUITE 2)
NEWTON, MA 02458
Tel: 617-816-0722
Email:edmond@spruhaneng.com

147 CHERRY SREET
NEWTON
MASSACHUSETTS

PROPOSED PLOT PLAN

REVISION BLOCK

DESCRIPTION	DATE
SETBACKS ADDED	6.27.23

All legal rights including, but not limited to, copyright and design patent rights, in the designs, arrangements and plans shown on this document are the property of Spruhan Engineering, P.C. They may not be used or reused in whole or in part, except in connection with this project, without the prior written consent of Spruhan Engineering, P.C.. Written dimensions on these drawings shall have precedence over scaled dimensions. Contractors shall verify and be responsible for all dimensions and conditions on this project, and Spruhan Engineering, P.C., must be notified of any variation from the dimensions and conditions shown by these drawings.

COMMONWEALTH OF MASSACHUSETTS
CHRISTOPHER C. CHARLTON
NO. 48649
PROFESSIONAL LAND SURVEYOR

DATE:	6/27/2023
DRAWN BY:	P.S
CHECKED BY:	C.C
APPROVED BY:	E.S

PROPOSED
PLOT PLAN

SHEET 2