EXTERIOR RESTORATION
At the Timothy Jackson Homestead
527 Washington St, Newton, MA

OWNER: City of Newton
Purchasing Department Room 204
1000 Commonwealth Ave., Newton, MA 02459
(617) 796-1220

ARCHITECT: CSS Architects Inc
107 Audubon Road,
Building Two, Suite 300
Wakefield, MA 01880
(781) 245-8400
Fax (781) 245-9372

LOCUS MAP NEWTON, MA

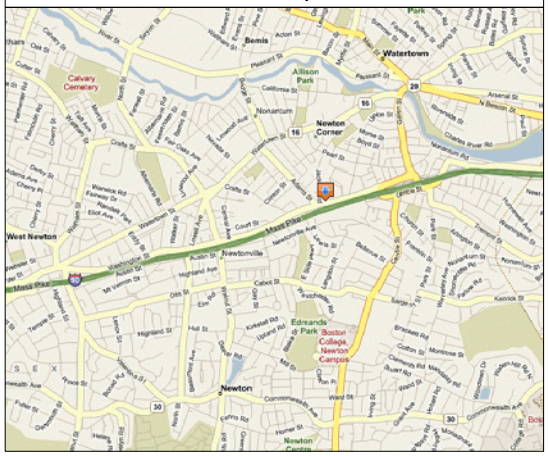

LIST OF CONSTRUCTION DRAWINGS

T1	TITLE SHEET
AD-1	DEMOLITION ELEVATIONS
AD-2	DEMOLITION ELEVATIONS
A-1	PROPOSED ELEVATIONS
A-2	PROPOSED ELEVATIONS
A-3	DETAILS

SET # _____

Exterior Restoration at the Jackson Homestead
NEWTON, MASSACHUSETTS
T-1

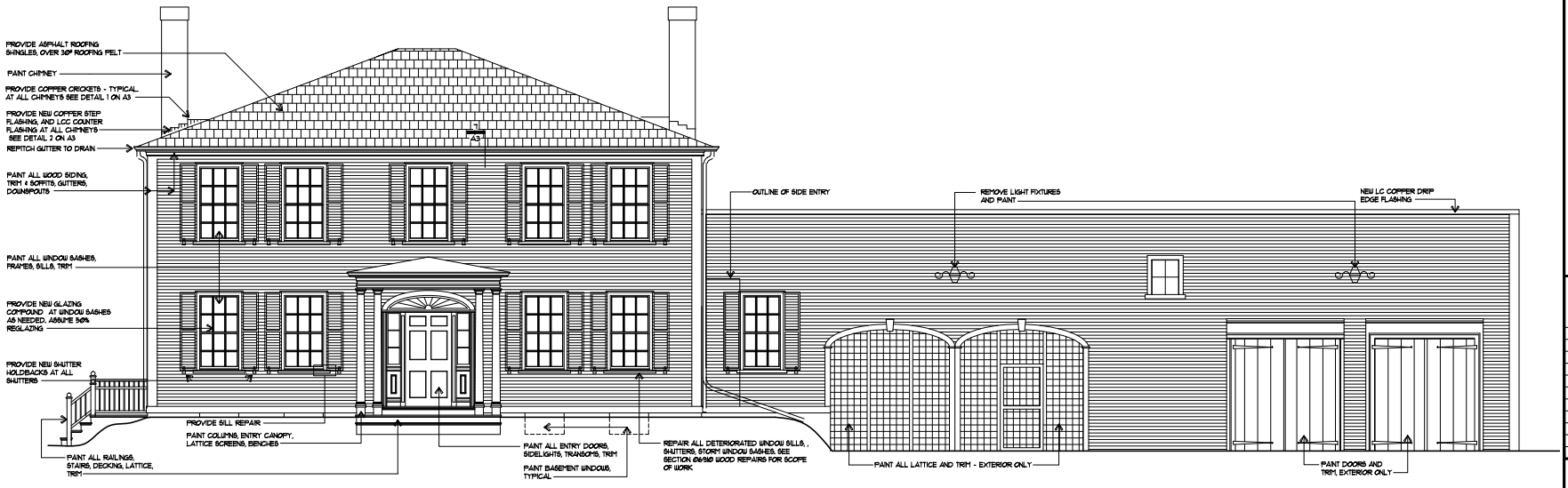

SOUTH ELEVATION 1

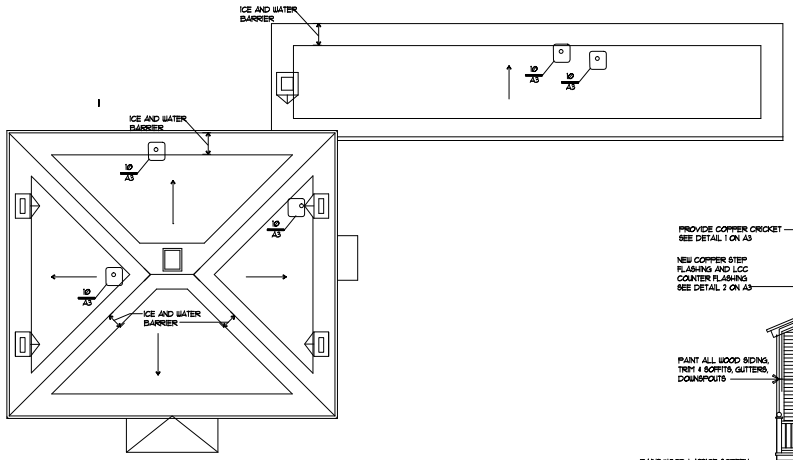

ROOF PLAN
SCALE: 1/8" = 1'-0"

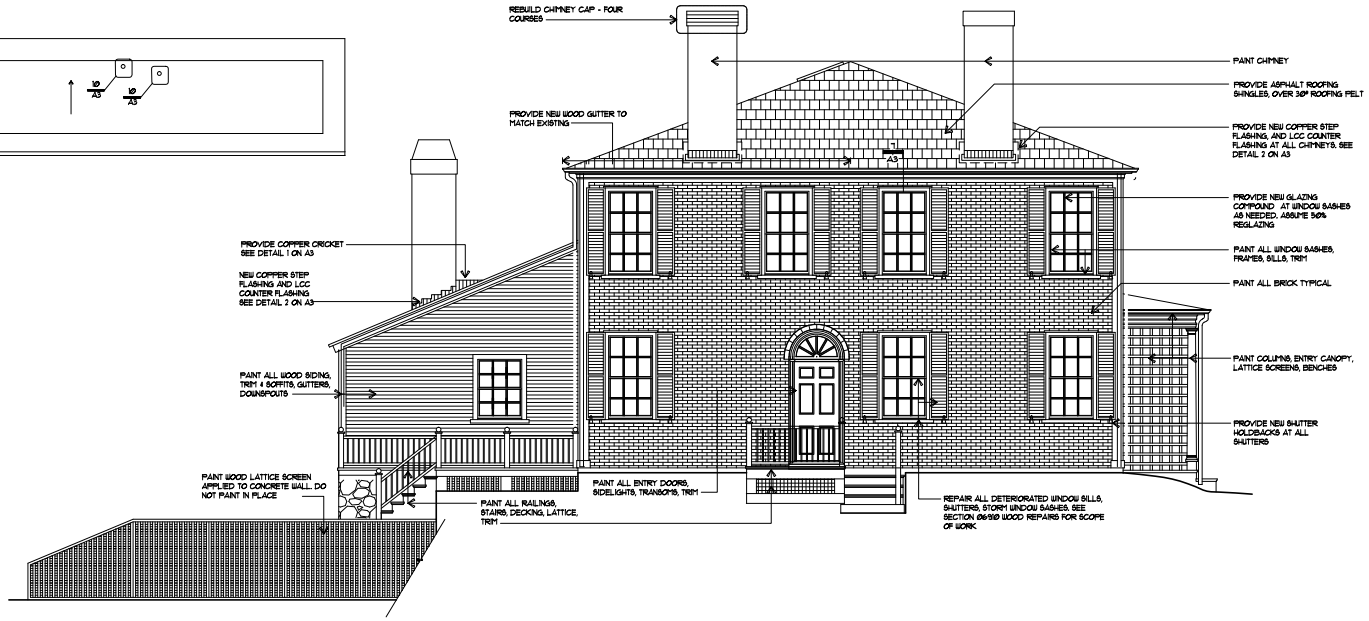

WEST ELEVATION 2

EXTERIOR RESTORATION AT TIMOTHY JACKSON HOMESTEAD

NEWTON, MA

Revisions

No.	Date	Description	By

CSS ARCHITECTS INC
CSS 107 Audubon Road Building Two, Suite 300 Wakefield, MA 01880 csarchitects@aol.com

Title :

PROPOSED ELEVATIONS ROOF PLAN

Scale : 1/4"=1'-0"
Date : 9/22/08
Drawn : ID/KC
Checked :KMS
Project No: 1072

A1

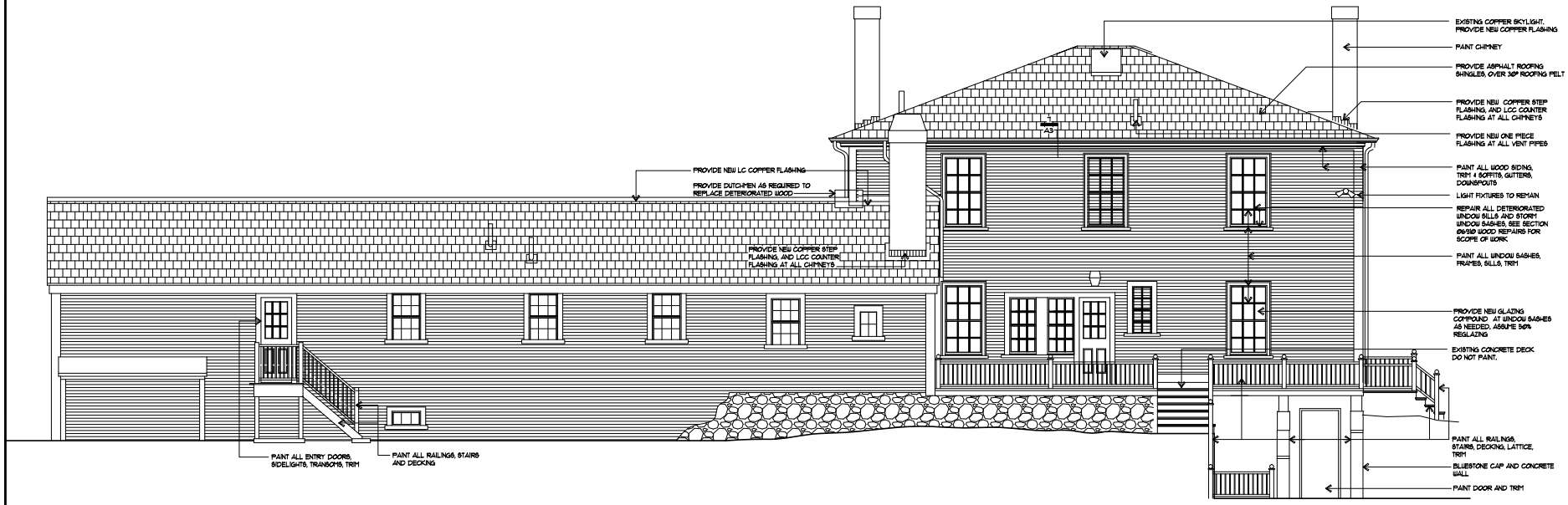

NORTH ELEVATION 1

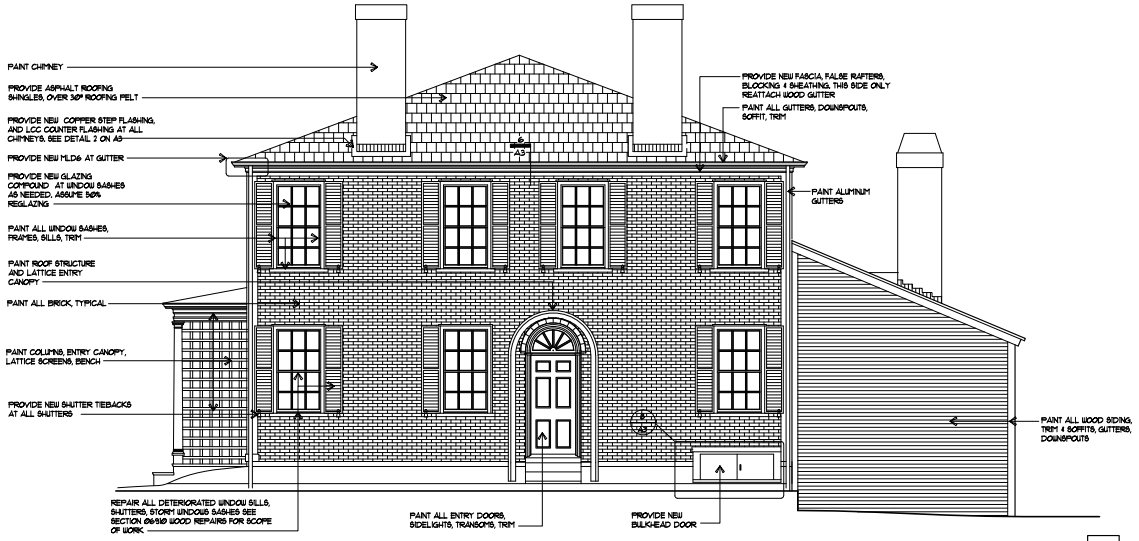

EAST ELEVATION 2

EXTERIOR RESTORATION AT TIMOTHY JACKSON HOMESTEAD

NEWTON, MA

Revisions

No.	Date	Description	By

CSS ARCHITECTS INC

CSS 107 Audubon Road Building Two, Suite 300 Wakefield, MA 01880 csarchitects@aol.com

Title :

ELEVATIONS PROPOSED

Scale : 1/4"=1'-0"

Date : 9/22/08

Drawn : ID/KC

Checked :KMS

Project No: 1072

A2

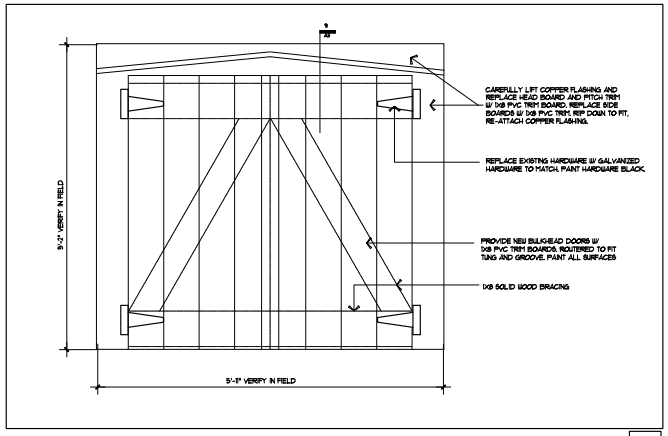

PLAN– BULKHEAD DOOR 8

SCALE: 1" = 1'-0"

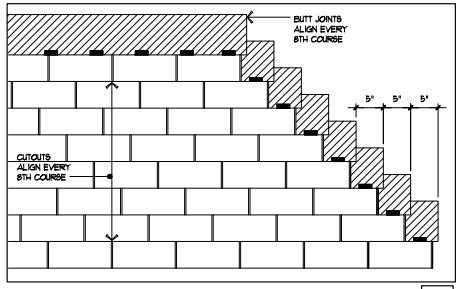

SHINGLE COURSING N.T.S. 4

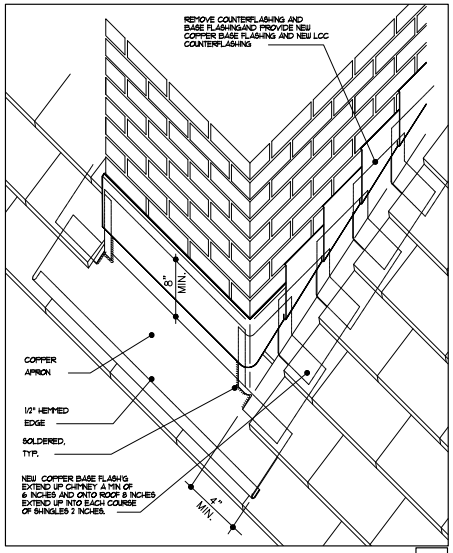

ISOMETRIC–CHIMNEY FLASHING DETAIL 1

N.T.S.

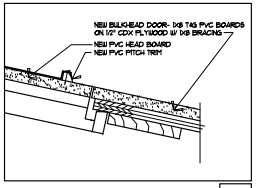

BULKHEAD DOOR HEAD 9

SCALE: 3" = 1'-0"

NOT USED 5

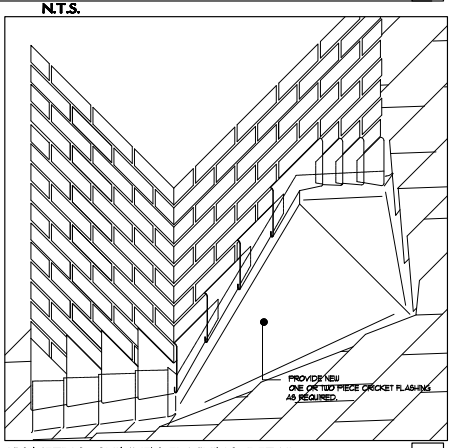

ISOMETRIC–CHIMNEY FLASHING DETAIL N.T.S. 2

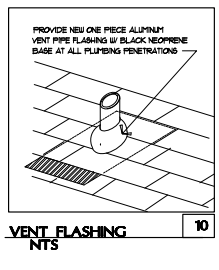

VENT FLASHING 10

NTS

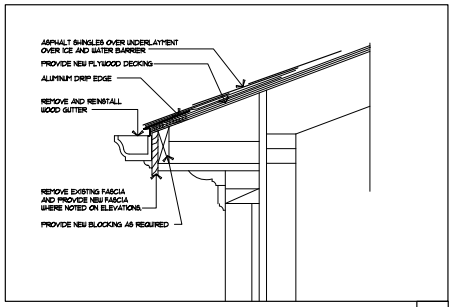

ROOF EAVE AT EAST ELEVATION 6

SCALE: 1 1/2" = 1'-0"

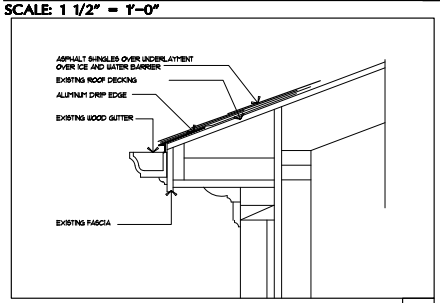

TYPICAL ROOF EAVE DETAIL 7

SCALE: 1 1/2" = 1'-0"

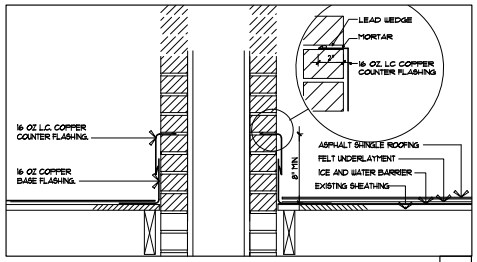

CHIMNEY FLASHING DETAIL 3

SCALE: 1 1/2" = 1'-0"

EXTERIOR RESTORATION AT TIMOTHY JACKSON HOMESTEAD

NEWTON, MA

Revisions

No.	Date	Description	By

CSS ARCHITECTS INC

CSS 107 Audubon Road Building Two, Suite 300 Wakefield, MA 01880 csarchitects@cs.com

Title :

DETAILS

Scale : AS NOTED

Date : 9/22/08

Drawn : KMS

Checked :KMS

Project No: 1072

A3

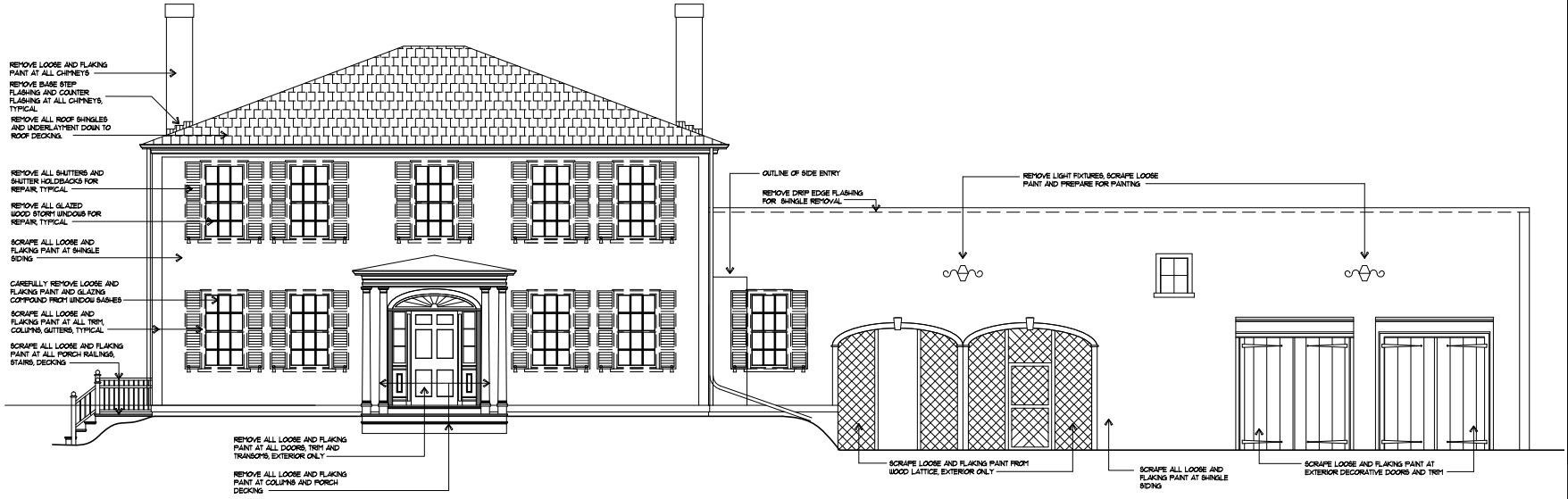

SOUTH ELEVATION 1

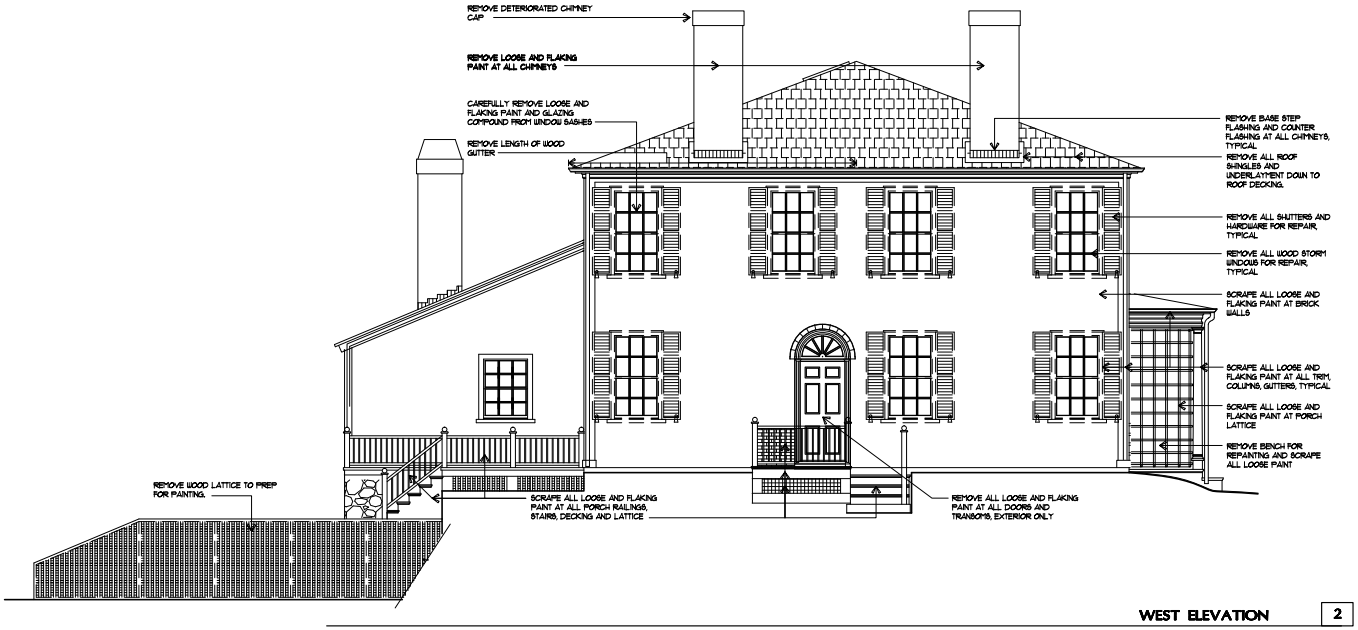

WEST ELEVATION 2

EXTERIOR RESTORATION AT TIMOTHY JACKSON HOMESTEAD

NEWTON, MA

Revisions

No.	Date	Description	By

CSS ARCHITECTS INC

CSS 107 Audubon Road Building Two, Suite 300 Wakefield, MA 01880 csarchitects@aol.com

Title :

ELEVATIONS DEMOLITION

Scale : 1/4"=1'-0"

Date : 9/22/08

Drawn : ID/KC

Checked :KMS

Project No: 1072

AD-1

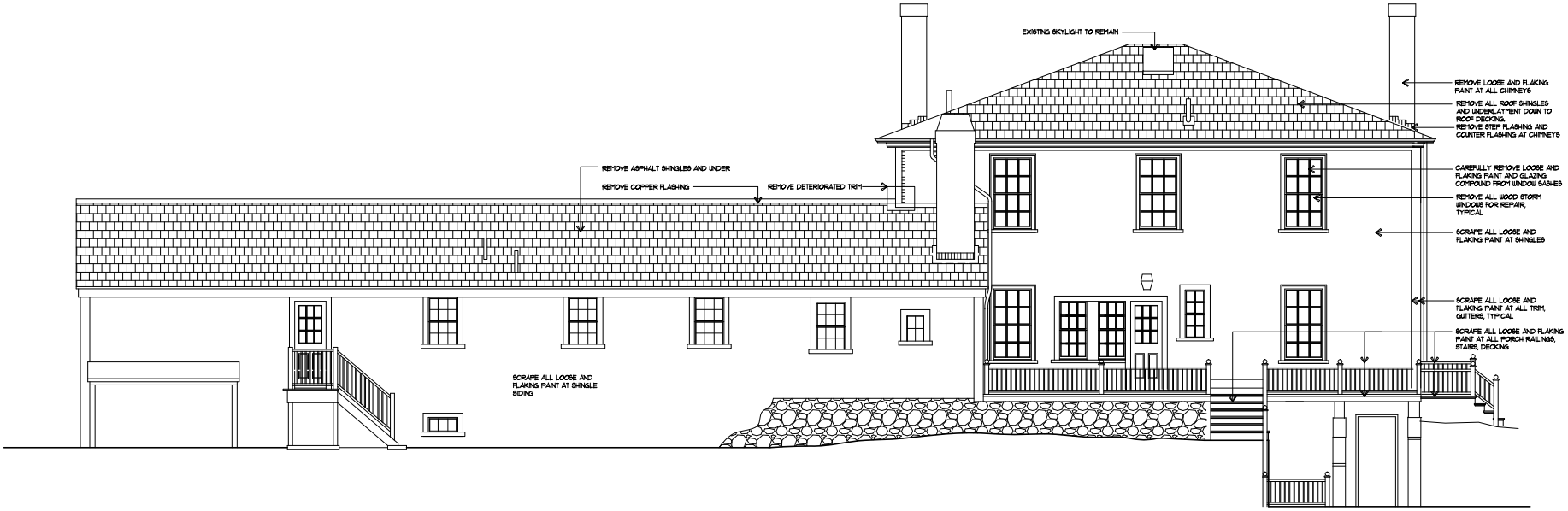

NORTH ELEVATION 1

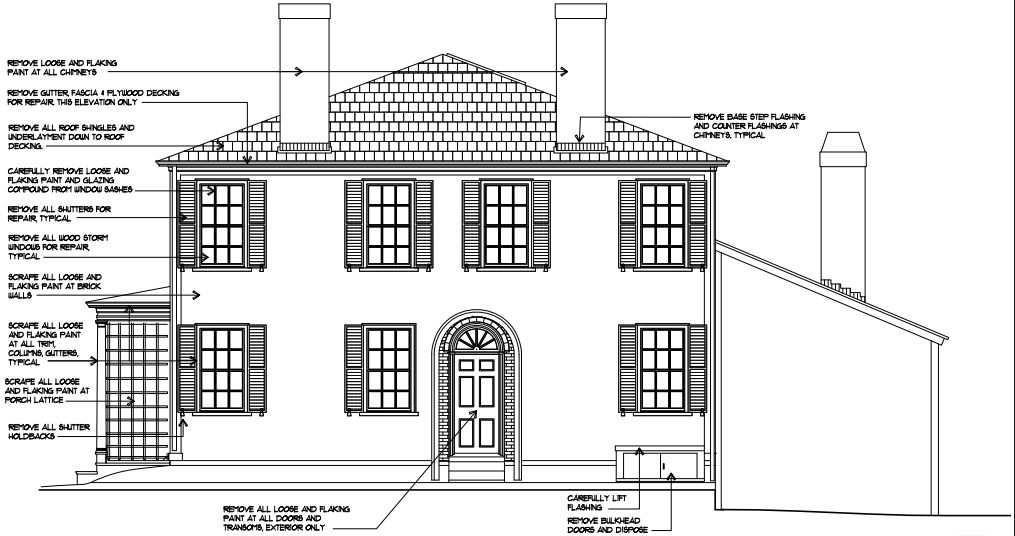

EAST ELEVATION 2

EXTERIOR RESTORATION AT TIMOTHY JACKSON HOMESTEAD

NEWTON, MA

Revisions

No.	Date	Description	By

CSS ARCHITECTS INC

CSS 107 Audubon Road Building Two, Suite 300 Wakefield, MA 01880 cssarchitects@cssarch.com

Title :

ELEVATIONS DEMOLITION

Scale : 1/4"=1'-0"

Date : 9/22/08

Drawn : ID/KC

Checked :KMS

Project No: 1072

AD-2