ZONING LEGEND

ZONING DISTRICT: MULTI RESIDENCE 2 (LOT CREATED AFTER 12/07/1953)

	REQUIRED	EXISTING #17	EXISTING #13	PROPOSED
MIN. AREA	10,000 S.F.	5,563±SF	11,016±SF	(R)16,616±S.F. 16,579±S.F.
MIN. FRONTAGE	80'	35'±	72'±	107'±
MIN. YARD FRONT	*25'	8.7'	14.9'	8.7'
SIDE	*7.5'	1.7'	11.1'	1.9'
REAR	*15'	109.9'	84.7'	27.7'
MAX LOT COVERAGE	30%	16.4%	13.4%	28.6%
MIN OPEN SPACE	50%	83.6%	75.6%	55%
MAX. BLDG. HEIGHT	36'	18.9'±	22.98'±	23.05'±

* SPECIAL PERMIT BONUS TAKEN

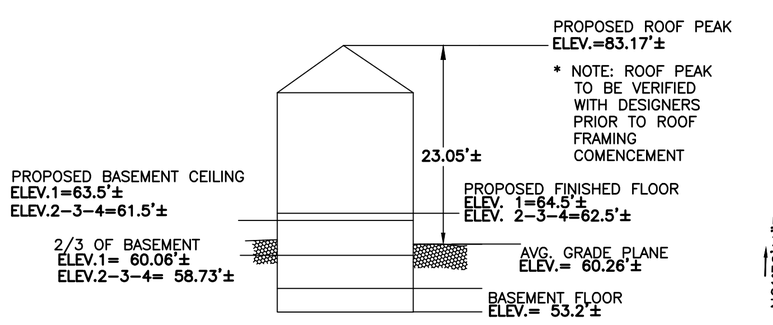

PROPOSED BUILDING PROFILE

NOT TO SCALE

* 2/3 OF BASEMENT ELEVATION LOWER THAN AVERAGE GRADE ELEVATION THEREFORE PROPOSED BASEMENT MEETS DEFINITION OF BASEMENT

EXISTING LEGEND

	TREE
	BOUND
	SEWER MANHOLE
	DRAIN MANHOLE
	CATCH BASIN
	WATER VALVE
	HYDRANT
	UTILITY POLE
148.00	SPOT GRADE
	EXISTING BUILDING
	FENCE
	SEWER LINE
	DRAIN LINE
	WATER LINE
	GAS LINE
OHW	OVERHEAD WIRES
145	CONTOUR LINE (MJR)
146	CONTOUR LINE (MNR)

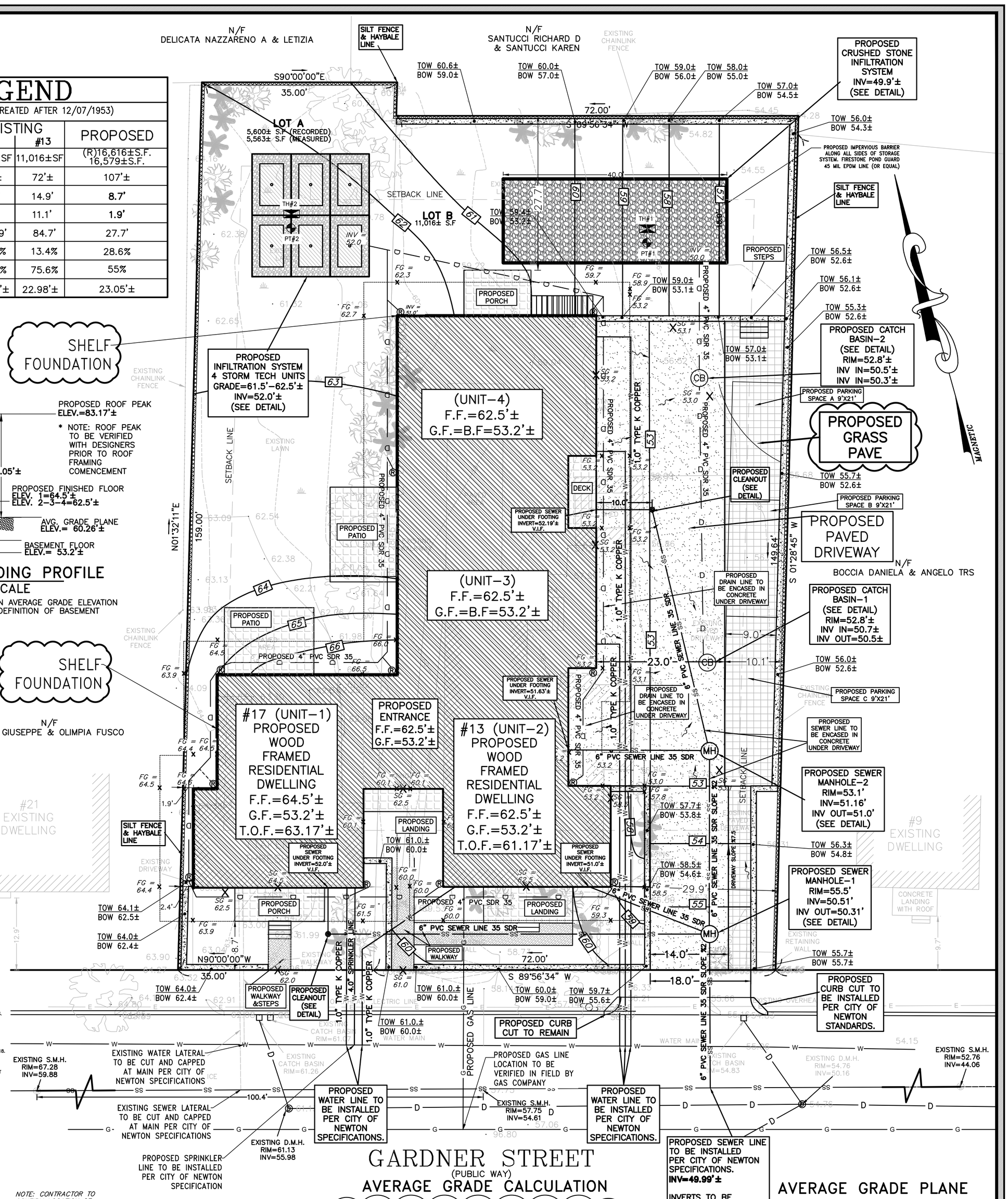

NOTES

1. ELEVATIONS REFER TO CITY OF NEWTON DATUM.
2. THE LOCATIONS AND ELEVATIONS OF ALL EXISTING UTILITIES SHALL BE CONSIDERED APPROXIMATE AND MUST BE VERIFIED BY THE CONTRACTOR PRIOR TO ANY CONSTRUCTION. THE CONTRACTOR SHALL VERIFY THE LOCATIONS OF ANY CROSSINGS OF PROPOSED AND EXISTING UTILITIES.
3. MASSACHUSETTS STATE LAW REQUIRES UTILITY NOTIFICATION AT LEAST THREE BUSINESS DAYS PRIOR TO CONSTRUCTION. THE CONTRACTOR SHALL CALL DIG-SAFE AT 1-888-344-7233 IN ORDER TO COMPLY WITH STATE LAW.
4. ALL UTILITY CONSTRUCTION SHALL CONFORM TO THE CITY OF NEWTON GENERAL CONSTRUCTION DETAILS, LATEST EDITION, PREPARED AND ISSUED BY THE NEWTON ENGINEERING DEPARTMENT. COPIES MAY BE OBTAINED AT THE OFFICE OF THE CITY ENGINEER. REFER TO NOTE 29 FOR DETAILS. NOTE: A TRENCH PERMIT MUST BE OBTAINED PRIOR TO ANY EXCAVATION BEING CARRIED OUT.
5. PROPOSED SEWER PIPE SHALL BE 6" PVC SDR 35.
6. PROPOSED WATER SERVICE SHALL BE 1" TYPE K COPPER.
7. THIS PLAN IS THE RESULT OF AN INSTRUMENT SURVEY DONE ON THE GROUND SEPTEMBER 7, 2018.
8. ALL WORK SHALL BE SUBJECT TO THE INSPECTION BY AND APPROVAL OF THE CITY ENGINEER.
9. NO EXCAVATION SHALL BE MADE BY THE CONTRACTOR IN ANY PUBLIC WAY OR UTILITY EASEMENT UNLESS AT LEAST FORTY-EIGHT (48) HOURS, EXCLUSIVE OF SATURDAYS, SUNDAYS, AND HOLIDAYS, BEFORE THE PROPOSED EXCAVATION IS TO BE MADE, HE HAS SUBMITTED, BY REGISTERED MAIL, WRITTEN NOTICE OF THE PROPOSED EXCAVATION TO THE FOLLOWING:
   a. SUCH PUBLIC UTILITY COMPANIES AS SUPPLY GAS, ELECTRICITY, AND TELEPHONE SERVICE IN THE CITY.
   b. SUCH PRIVATE COMPANIES AS PROVIDE CABLE TELEVISION SERVICE IN THE CITY.
   c. CITY OF NEWTON WATER & SEWER DEPARTMENT. SUCH NOTICE SHALL SET FORTH THE STREET NAME AND A REASONABLY ACCURATE DESCRIPTION OF THE LOCATION OF THE EXCAVATION.
10. THE CONTRACTOR SHALL PROVIDE CITY OF NEWTON POLICE OFFICERS FOR THE DIRECTION AND CONTROL OF TRAFFIC, AS REQUIRED BY THE CITY ENGINEER.
11. NO WORK SHALL BE PERFORMED UNTIL THE NECESSARY PERMITS ARE OBTAINED FROM THE CITY OF NEWTON PUBLIC WORKS DEPARTMENT.
12. ALL TRENCHES IN PAVED STREETS SHALL BE TEMPORARILY PATCHED WITH 1.5 INCH DEPTH OF BITUMINOUS CONCRETE, LAID HOT AND MAINTAINED UNTIL THE PERMANENT PATCH IS INSTALLED.
13. WARNING SIGNS SHALL CONFORM TO PAGE 12 OF THE CITY OF NEWTON GENERAL CONSTRUCTION DETAILS.
14. ALL TOPSOIL, SUBSOIL OR IMPERVIOUS SOIL MUST BE EXCAVATED AND REMOVED BELOW THE LEACHING SYSTEM AND TO A DISTANCE 5' LATERALLY IN ALL DIRECTIONS BEYOND THE SIDES OF THE GALLEYS. BACKFILL AS REQUIRED WITH A CLEAN GRANULAR SAND, FREE FROM ORGANIC MATTER AND DELETERIOUS SUBSTANCES. THE SAND SHALL HAVE A PERCOLATION RATE OF 2 MINUTES PER INCH OR FASTER.
15. IN CASES WHERE LEDGE OR BOULDERS ARE ENCOUNTERED, SPRUHAN ENGINEERING, P.C. WILL NOT BE RESPONSIBLE FOR THE AMOUNT OF ROCK ENCOUNTERED.
16. IF ANY PART OF THIS DESIGN IS TO BE ALTERED IN ANY WAY, THE DESIGN ENGINEER, AS WELL AS THE APPROVING AUTHORITIES, SHALL BE NOTIFIED IN WRITING BEFORE CONSTRUCTION.
17. THE ROOF RUNOFF FROM THE ROOF SURFACES SHALL BE COLLECTED BY GUTTERS AND DIRECTED TO THE STORM WATER DRAINAGE SYSTEM.
18. PRIOR TO AN OCCUPANCY PERMIT BEING ISSUED, AN AS-BUILT PLAN SHOULD BE SUBMITTED TO THE ENGINEERING DIVISION IN BOTH DIGITAL FORMAT AND HARD COPY. THE PLAN SHOULD SHOW ALL UTILITIES AND FINAL GRADES, TIES TO ALL GATES, VALVES, CLEAN-OUTS, CONNECTION POINTS AT MAINS, STRUCTURE ACCESS/MAINTENANCE COVERS, ANY EASEMENTS AND FINAL GRADING.
19. THE APPLICANT WILL HAVE TO APPLY FOR A STREET OPENING & UTILITIES CONNECTION PERMITS AS WELL AS A SIDEWALK CROSSING PERMIT AND A TRENCH PERMIT WITH THE DPW.
20. THE CONTRACTOR IS RESPONSIBLE FOR NOTIFYING THE DESIGN ENGINEER FOR INSPECTIONS OR AS-BUILT LOCATIONS. PETER NOLAN & ASSOCIATES, LLC. WILL NOT PROVIDE AS-BUILT CERTIFICATION TO UNINSPECTED BACKFILLED UTILITIES. A MINIMUM OF 48 HOURS NOTICE IS REQUIRED PRIOR TO INSPECTIONS.
21. ANY PROPOSED PVC PIPES UNDER PAVING OR CONCRETE WITH LESS THAN 30" OF COVER MUST MUST BE ENCASED IN CONCRETE. (SEE PAGE 21, CITY OF NEWTON GENERAL CONSTRUCTION DETAILS.)
22. THE EXISTING WATER & SEWER SERVICES SHALL BE CUT AND CAPPED AT THE MAIN AND BE COMPLETELY REMOVED FROM THE SITE, REPLACED AS SPECIFIED AND PROPERLY BACKFILLED. THE ENGINEERING DIVISION MUST INSPECT THIS WORK; FAILURE TO HAVE THIS WORK INSPECTED MAY RESULT IN THE DELAY OF ISSUANCE OF THE UTILITY CONNECTION PERMIT.
23. THE CONTRACTOR SHALL NOTIFY THE ENGINEERING DIVISION 48 HOURS IN ADVANCE AND SCHEDULE AN APPOINTMENT TO HAVE THE DRAINAGE SYSTEM, WATER & SEWER SERVICES INSPECTED. THE SYSTEM & UTILITIES MUST BE FULLY EXPOSED FOR THE INSPECTOR. ONCE THE INSPECTOR IS SATISFIED, THE SYSTEM & UTILITIES MAY THEN BE BACKFILLED.
24. THE EXISTING CONTOURS OF THE LAND ARE NOT TO BE ALTERED BY MORE THAN THREE (3) FEET AS A RESULT OF THE PLACEMENT OR REMOVAL OF SOD, LOAM, CLAY, GRAVEL OR STONE, OR OTHER SOLID MATERIAL UNLESS A PROPOSED RETAINING WALL OR SWALE IS INSTALLED AFTER IT IS APPROVED BY BOTH CITY OF NEWTON ENGINEERING DEPARTMENT & CITY OF NEWTON I.S.D
25. IF A CERTIFICATE OF OCCUPANCY IS REQUESTED PRIOR TO ALL SITE WORK BEING COMPLETED, THE APPLICANT WILL BE REQUIRED TO POST A CERTIFIED BANK CHECK IN THE AMOUNT TO COVER THE REMAINING WORK. THE CITY ENGINEER SHALL DETERMINE THE VALUE OF THE UNCOMPLETED WORK.
26. NO WORK IS ALLOWED WITHIN A CITY OF NEWTON RIGHT-OF-WAY BETWEEN NOVEMBER 15TH AND APRIL 15TH. IF AN EMERGENCY EXISTS OR THERE ARE EXTENUATING CIRCUMSTANCES, APPLICANT MAY REQUEST PERMISSION FROM THE CITY ENGINEER. IF ALLOWED, SPECIAL CONSTRUCTION REQUIREMENTS WILL BE REQUIRED, AND AS SUCH IT IS RECOMMENDED THAT THE APPLICANT OR APPLICANT'S REPRESENTATIVE CONTACT THE CITY OF NEWTON ENGINEERING DEPARTMENT PRIOR TO START OF WORK FOR CLARIFICATION.
27. AT THE END OF CONSTRUCTION, ALL DRAINAGE STRUCTURES ARE TO BE CLEANED OF SILT, STONES AND OTHER DEBRIS. 28. DURING CONSTRUCTION, THE EROSION CONTROL MEASURES SHALL BE INSPECTED ONCE PER WEEK AND WITHIN 24 HOURS OF ANY STORM EVENT GENERATING MORE THAN 1/2" OF RAINFALL. THE EROSION CONTROL MEASURES SHALL BE CLEANED REGULARLY AND ADJUSTED IF NECESSARY TO ENSURE THAT NO SILT OR DEBRIS LEAVES THE SITE.
29. WITH EXCEPTION OF GAS UTILITY SERVICES, ALL UTILITY TRENCHES WITHIN ANY CITY OF NEWTON RIGHT-OF-WAY WILL BE BACKFILLED WITH TYPE IE (EXCAVATABLE) CONTROLLED DENSITY FILL, AS SPECIFIED BY THE CITY OF NEWTON ENGINEERING SPECIFICATIONS.
30. ALL CONSTRUCTION ACTIVITIES WITHIN THE CITY OF NEWTON RIGHT-OF-WAY MUST FULLY COMPLY WITH ALL OF CITY OF NEWTON CONSTRUCTION SPECIFICATIONS AS WELL AS 521 CMR 21.00 AND 22.00.
31. THE NEW SEWER SERVICE LINE MUST BE PRESSURE TESTED PRIOR TO USE. THE RESULT OF THE TEST MUST BE PROVIDED TO THE ENGINEERING DIVISION PRIOR TO THE ISSUANCE OF A CERTIFICATE OF OCCUPANCY. THE CONTRACTOR NEEDS TO NOTIFY THE ENGINEERING DIVISION 48 HOURS IN ADVANCE AND SCHEDULE AN APPOINTMENT TO HAVE THE PRESSURE TEST WITNESSED BY A CITY OF NEWTON ENGINEERING. DEPARTMENT REPRESENTATIVE.
32. THE CONTRACTOR NEEDS TO NOTIFY THE ENGINEERING DIVISION 48 HOURS IN ADVANCE AND SCHEDULE AN APPOINTMENT TO HAVE THE DRAINAGE SYSTEM INSPECTED. THE SYSTEM MUST BE FULLY EXPOSED FOR THE INSPECTOR. ONCE THE INSPECTOR IS SATISFIED, THE SYSTEM MAY THEN BE CONSTRUCTED. 33. ALL SILTATION CONTROL NEEDS TO BE INSTALLED PRIOR TO ANY CONSTRUCTION. THE CONTRACTOR SHALL CONTACT THE CITY ENGINEER'S OFFICE FOR APPROVAL PRIOR TO COMMENCEMENT.
34. ALL TRENCH EXCAVATION CONTRACTORS SHALL COMPLY WITH MGL CHAPTER 82A, TRENCH EXCAVATION SAFETY REQUIREMENTS, TO PROTECT THE GENERAL PUBLIC FROM UNAUTHORIZED ACCESS TO UNATTENDED TRENCHES. A TRENCH EXCAVATION PERMIT IS REQUIRED.
35. APPROVAL OF THIS PLAN BY CITY OF NEWTON ENGINEERING DIVISION IMPLIES THAT THE PLAN MEETS THE MINIMAL DESIGN STANDARDS OF THE CITY OF NEWTON. HOWEVER, THE ENGINEERING DIVISION MAKES NO REPRESENTATION AND ASSUMES NO RESPONSIBILITY FOR THE DESIGN(S) IN TERMS OF SUITABILITY FOR THE PARTICULAR SITE CONDITIONS OR OF THE FUNCTIONABILITY OR PERFORMANCE OF ANY ITEMS CONSTRUCTED IN ACCORDANCE WITH THE DESIGN(S). THE CITY OF NEWTON ASSUMES NO LIABILITIES FOR DESIGN ASSUMPTION, ERRORS OR OMISSIONS BY THE ENGINEER OF RECORD.

NOTE: CONTRACTOR TO CONFIRM LOCATION OF DOWN SPOUTS PRIOR TO CARRYING OUT ANY DRAINAGE WORKS

NOTE: SURFACE WATER TO BE DIVERTED FROM ALL SIDES OF FOUNDATION WALL

NOTE: ANY TREE BEING REMOVED SHALL COMPLY WITH CITY OF NEWTON TREE ORDINANCE

NOTE: CONTRACTOR TO ENSURE SEWER LINE IS PITCHED AT AN EQUAL SLOPE OF BETWEEN 2% AND 10% FROM HOUSE TO MAIN CONNECTION

NOTE: PETER NOLAN & ASSOCIATES LLC, AND SPRUHAN ENGINEERING, P.C, ACCEPT NO LIABILITY FOR GROUND WATER OR OTHER SURFACE WATER IN BASEMENT

NOTE: CONTRACTOR TO ENSURE ALL RAIN WATER FROM SPLASH BLOCKS (IF ANY) IS DIVERTED AWAY FROM BUILDING FOUNDATION AND DIVERTED AWAY FROM NEIGHBORING PROPERTIES

NOTE: SEWER AND WATER MAIN LINE LOCATION TO BE CONFIRMED BY CONTRACTOR

NOTE: CONTRACTOR TO ENSURE THAT THE BUILDING FOOTPRINT REPRESENTED ON THIS PLAN IS THE SAME AS THE PROPOSED ARCHITECTURAL /STURUCTURAL PLANS AND INCORPORATES ALL OVERHANGS, CANTILEVERS AND ANY COMPONENT THAT IS SUBJECT TO ZONING RESTRICTIONS. IF THIS IS FOUND NOT TO BE THE CASE THE CONTRACTOR MUST CONTACT THE ENGINEER /SURVEYOR AND REQUEST A REVISED PLAN WHICH MUST BE RESUBMITTED TO I.S.D. CITY OF NEWTON

LEGEND

	UTILITY POLE
W	WATER GATE
	HYDRANT
G	GAS GATE
S	SEWER MANHOLE
D	DRAIN MANHOLE
	CATCH BASIN
	TREE
	LIGHT POLE
	SIGN
TBR	TO BE REMOVED
TBA	TO BE ABANDONED
TOW	TOP OF WALL
BOW	BOTTOM OF WALL
FG	FINISHED GRADE
SG	SPOT GRADE
TH#1	DEEP TEST HOLE
PT#1	PERCOLATION TEST
71.4 X	SPOT ELEVATION
71	PROPOSED CONTOUR
71	EXISTING CONTOUR
D	DRAIN LINE
W	WATER LINE
SS	SEWER LINE
G	GAS LINE
X	FENCE

GRAPHIC SCALE

10 0 5 10 20 40

(IN FEET)
1 inch = 10 ft.

AVERAGE GRADE CALCULATION

AVERAGE GRADE PLANE (ALL UNITS IN FEET)

SEGMENT	LENGTH	POINT 1	POINT 2	MEAN 1 & 2	MEAN x LENGTH
1	35.60	62.30	59.70	61.00	2,171.60
2	25.10	53.20	53.20	53.20	1,335.32
3	12.90	53.20	53.20	53.20	686.28
4	25.10	53.20	53.10	53.15	1,334.07
5	21.10	53.20	53.20	53.20	1,122.52
6	7.60	53.20	53.20	53.20	404.32
7	18.10	57.80	58.50	58.15	1,052.52
8	30.00	59.30	60.00	59.65	1,789.50
9	17.50	60.00	60.10	60.05	1,050.88
10	14.30	60.10	60.10	60.10	859.43
11	17.70	60.10	60.00	60.05	1,062.89
12	30.50	61.50	63.90	62.70	1,912.35
13	17.70	64.40	64.50	64.45	1,140.77
14	4.30	64.40	64.50	64.45	277.14
15	20.40	64.60	63.90	64.25	1,310.70
16	32.20	64.50	66.00	65.25	2,101.05
17	64.30	66.50	62.70	64.60	4,153.78
SUM =	394.40				23,765.09
SUM OF MEAN x LENGTH/ SUM OF LENGTHS = AVERAGE GRADE PLANE =					**60.26**

NOTES:

1. INFORMATION SHOWN ON THIS PLAN IS THE RESULT OF A FIELD SURVEY PERFORMED BY PETER NOLAN & ASSOCIATES LLC AS OF 9-7-2018.
2. #13 DEED REFERENCE BOOK 30163 PAGE 450
   PLAN REFERENCE BOOK 10663 PAGE 136
   #17 DEED REFERENCE BOOK 59777 PAGE 3

   MIDDLESEX SOUTH DISTRICT REGISTRY OF DEEDS.
3. THIS PLAN IS NOT INTENDED TO BE RECORDED.
4. I CERTIFY THAT THE DWELLING SHOWN IS NOT LOCATED WITHIN A SPECIAL FLOOD HAZARD ZONE. IT IS LOCATED IN ZONE X, ON FLOOD HAZARD BOUNDARY MAP NUMBER 25017C0552E, PANEL NUMBER 0552E, COMMUNITY NUMBER: 250208, DATED JUNE 4, 2010.
5. THIS PLAN DOES NOT SHOW ANY UNRECORDED OR UNWRITTEN EASEMENTS WHICH MAY EXIST. A REASONABLE AND DILIGENT ATTEMPT HAS BEEN MADE TO OBSERVE ANY APPARENT USES OF THE LAND; HOWEVER THIS NOT CONSTITUTE A GUARANTEE THAN NO SUCH EASEMENTS EXIST.
6. FIRST FLOOR ELEVATIONS ARE TAKEN AT THRESHOLD.

AVERAGE GRADE PLANE

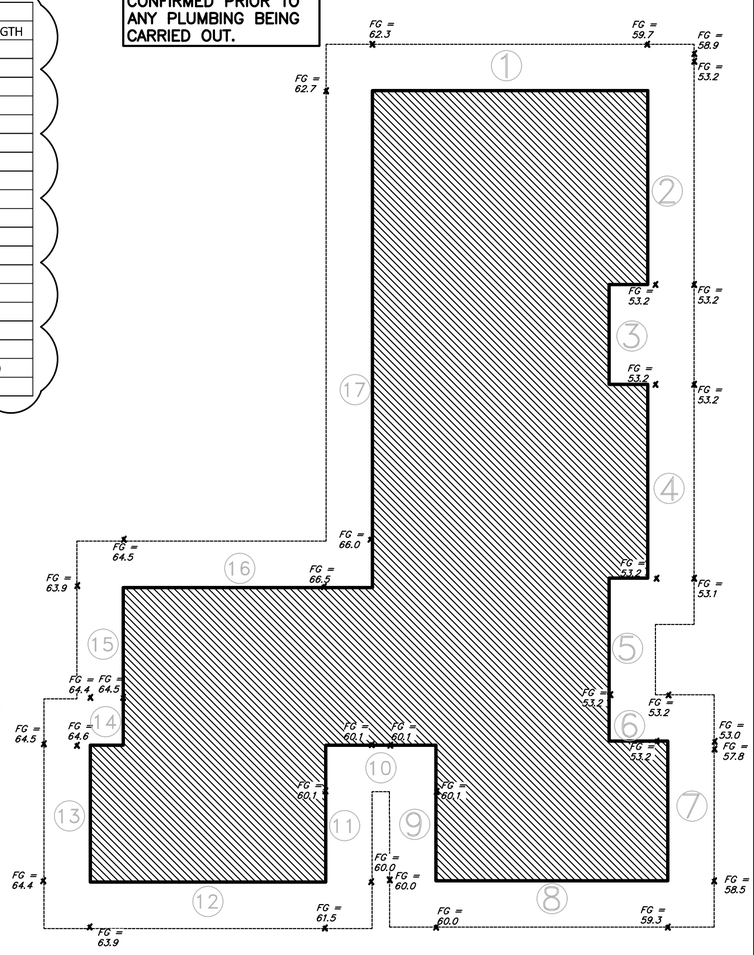

REVISION BLOCK

BY	DESCRIPTION	DATE

SCALE	1"=10'
DATE	7/17/19
DRAWN BY	PS
CHECKED BY	ES
APPROVED BY	ES
SHEET	2
PLAN NO.	2 OF 4
CLIENT:	

SHEET: 2 of 4

All legal rights including, but not limited to, copyright and design patent rights, in the designs, arrangements and plans shown on this document are the property of Peter Nolan & Associates, LLC, or Spruhan Engineering, P.C. They may not be used or reused in whole or in part, except in connection with this project, without the prior written consent of Spruhan Engineering, P.C.. Written dimensions on these drawings shall have precedence over scaled dimensions. Contractors shall verify and be responsible for all dimensions and conditions on this project, and Spruhan Engineering, P.C., must be notified of any variation from the dimensions and conditions shown by these drawings.

13-17 GARDNER STREET, NEWTON, MASSACHUSETTS

PROPOSED CIVIL PLAN

PETER NOLAN & ASSOCIATES, LLC
LAND SURVEYORS/CIVIL ENGINEERING CONSULTANTS
697 CAMBRIDGE STREET, (SUIT103), BRIGHTON, MA 02135
Tel:857-891-7478
617-782-1533
Fax:617-2025691

SPRUHAN ENGINEERING, P.C.
80 JEWETT ST. (SUITE 1) NEWTON, MA 02458
Tel: 617-816-0722
Email:edmond@spruhaneng.com