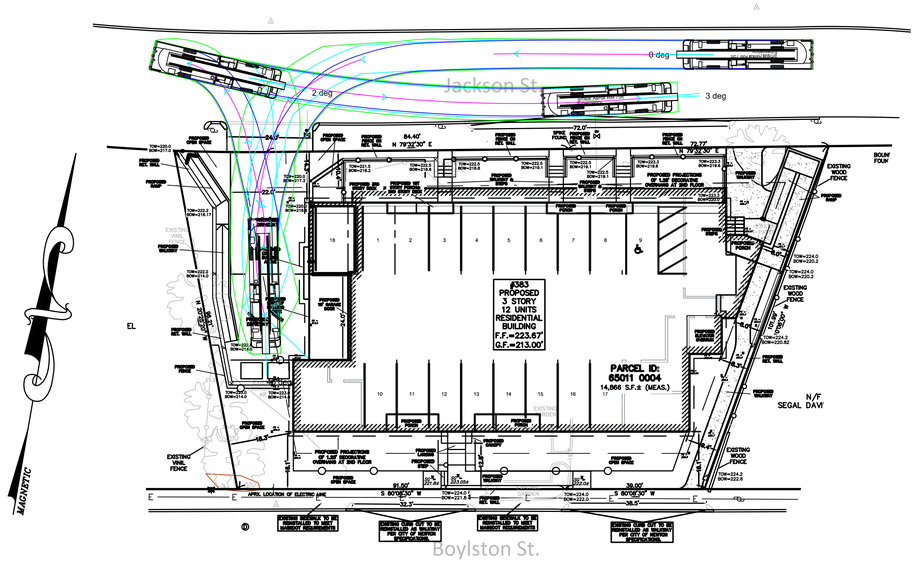

EMERGENCY FIRE TRUCK– DRIVE IN/OUT
SCALE 1"=20'

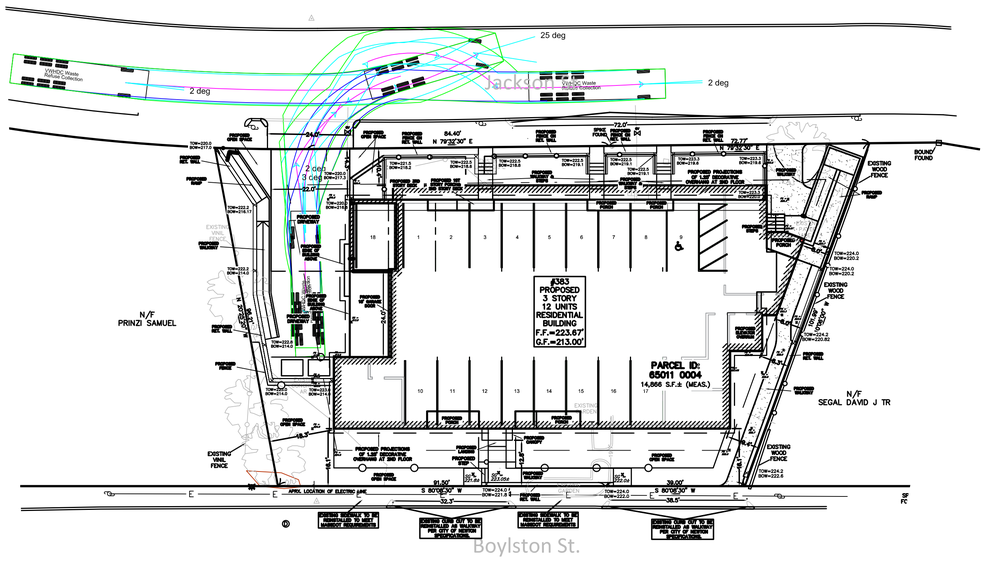

EMERGENCY DUMPSTER TRUCK– DRIVE IN/OUT
SCALE 1"=20'

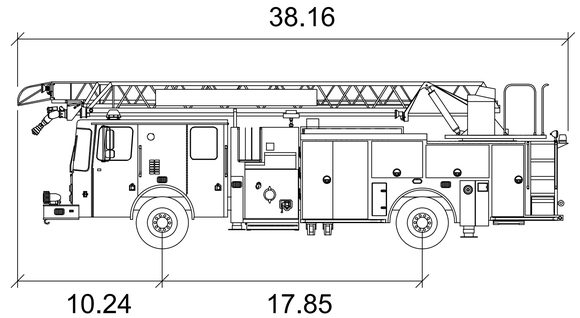

Smeal Aerial RM 75ft

		Feet
Width	:	8.33
Track	:	7.91
Lock to Lock Time	:	6.0 s
Steering Angle	:	45.0 deg

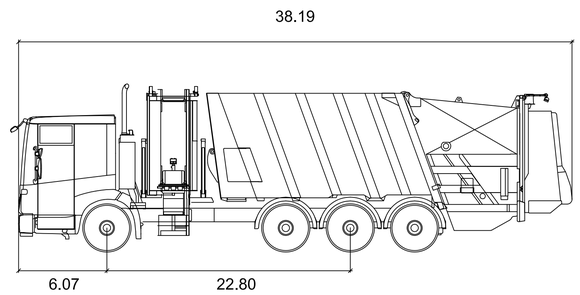

VWHDC Waste

		Feet
Width	:	8.20
Track	:	8.20
Lock to Lock Time	:	6.0 s
Steering Angle	:	42.5 deg

Spruhan
Engineering, P.C.
80 JEWETT ST, (SUITE 1)
NEWTON, MA 02458
Tel: 617-816-0722
Email:espruhan@gmail.com

383–387 BOYLSTON
STREET
NEWTON
MASSACHUSETTS

SURVEY PLAN

REVISION BLOCK

DESCRIPTION	DATE
UPDATED PER COMMENTS	10/17/21
UPDATED PER ARCHITECT REQUEST	11/3/21
UPDATED PER ARCHITECT REQUEST	12/10/21

All legal rights including, but not limited to, copyright and design patent rights, in the designs, arrangements and plans shown on this document are the property of Spruhan Engineering, P.C. They may not be used or reused in whole or in part, except in connection with this project, without the prior written consent of Spruhan Engineering, P.C.. Written dimensions on these drawings shall have precedence over scaled dimensions. Contractors shall verify and be responsible for all dimensions and conditions on this project, and Spruhan Engineering, P.C., must be notified of any variation from the dimensions and conditions shown by these drawings.

DRAFT

DATE:	1/21/2022
DRAWN BY:	D.K.
CHECKED BY:	E.S
APPROVED BY:	E.S

SITE PLAN

SHEET 1 OF 1