EXISTING LEGEND

SS	SEWER LINE
Ⓢ	SEWER MANHOLE
W	WATER LINE
G	GAS LINE
	UTILITY POLE
GV	GAS VALVE
E	OVERHEAD ELECTRIC SERVICE
WV	WATER VALVE
□	CATCH BASIN
	FENCE
205	CONTOUR LINE (MJR)
195	CONTOUR LINE (MNR)
X	SPOT GRADE
Ⓓ	DRAIN MANHOLE
	HYDRANT
	TREE

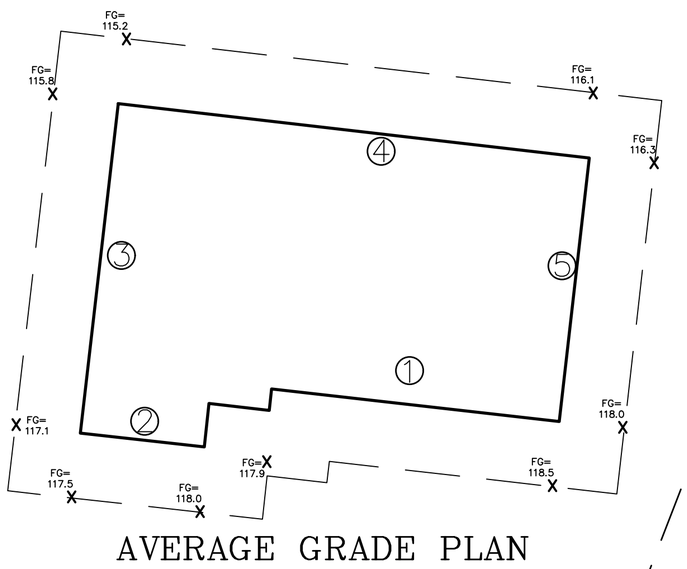

AVERAGE GRADE PLAN

AVERAGE GRADE PLANE (ALL UNITS IN FEET)					
SEGMENT	LENGTH	POINT 1	POINT 2	MEAN 1 & 2	MEAN x LENGTH
1	24.00	118.20	117.90	118.05	2,833.20
2	5.00	117.90	117.90	117.90	589.50
3	24.00	117.80	117.50	117.65	2,823.60
4	24.00	116.90	116.20	116.55	2,797.20
5	7.00	116.20	116.10	116.15	813.05
6	2.50	116.10	115.90	116.00	290.00
7	17.00	115.90	115.80	115.85	1,969.45
8	4.00	115.80	116.60	116.20	464.80
9	24.00	116.60	116.80	116.70	2,800.80
10	18.90	117.00	118.20	117.60	2,222.64
SUM =	150.40				17,604.24
SUM OF MEAN x LENGTH/SUM OF LENGTHS = AVERAGE GRADE PLANE =					**117.05**

AVERAGE GRADE CALCULATION

NOTES:

1. INFORMATION SHOWN ON THIS PLAN IS THE RESULT OF A FIELD SURVEY PERFORMED BY SPRUHAN ENGINEERING, P.C. AS OF 10/13/2021.

2. DEED REFERENCE: BOOK 1159, PAGE 183

MIDDLESEX COUNTY DISTRICT REGISTRY OF DEEDS

3. THIS PLAN IS NOT INTENDED TO BE RECORDED.

4. I CERTIFY THAT THE DWELLING SHOWN IS LOCATED WITHIN A SPECIAL FLOOD HAZARD ZONE. IT IS LOCATED IN ZONE AE, ON FLOOD HAZARD BOUNDARY MAP NUMBER 25017C0554E, DATED 06/04/2010. THE 100-YEAR FLOOD ELEVATION AT THE SITE IS 112 NAVD88 = 118.8 CITY OF NEWTON DATUM.

5. THIS PLAN DOES NOT SHOW ANY UNRECORDED OR UNWRITTEN EASEMENTS WHICH MAY EXIST. A REASONABLE AND DILIGENT ATTEMPT HAS BEEN MADE TO OBSERVE ANY APPARENT USES OF THE LAND; HOWEVER THIS NOT CONSTITUTE A GUARANTEE THAT NO SUCH EASEMENTS EXIST.

6. FIRST FLOOR ELEVATIONS ARE TAKEN AT THRESHOLD.

7. NO RESPONSIBILITY IS TAKEN FOR ZONING TABLE AS SPRUHAN ENGINEERING, P.C. ARE NOT ZONING EXPERTS. TABLE IS TAKEN FROM TABLE PROVIDED BY LOCAL ZONING ORDINANCE. CLIENT AND/OR ARCHITECT TO VERIFY THE ACCURACY OF ZONING ANALYSIS.

8. THE ELEVATIONS SHOWN ARE BASED ON CITY OF NEWTON DATUM.

9.ZONING INFORMATION: SR2 (SINGLE RESIDENCE 2), LOT WAS RECORDED BEFORE 7 DECEMBER 1953

EXISTING PROFILE
NOT TO SCALE

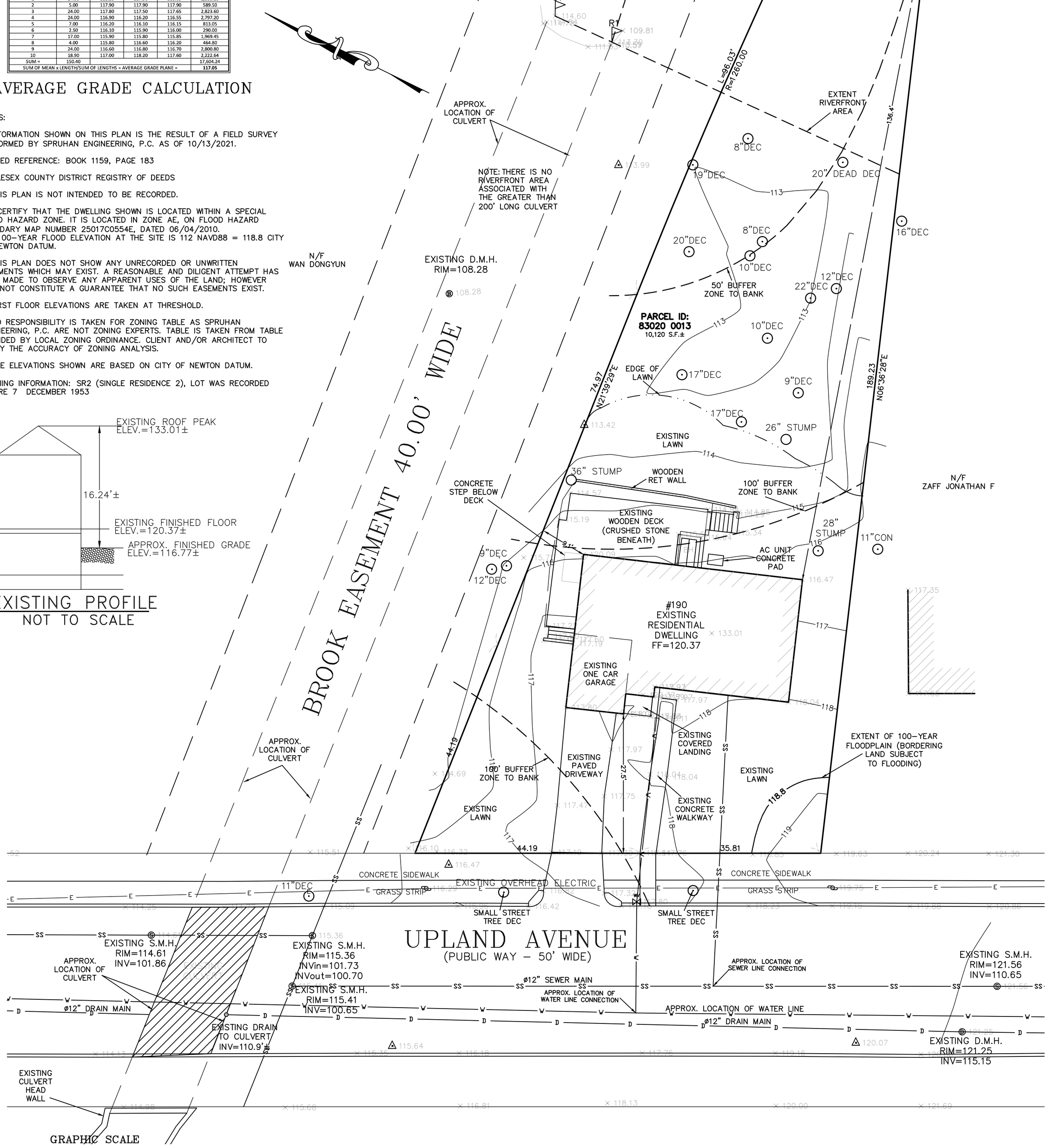

NOTE: THE RIVERFRONT AREA ACROSS THE STREET FROM SITE IS NOT SHOWN ON THIS PLAN

Spruhan Engineering, P.C.
80 JEWETT ST, (SUITE 2)
NEWTON, MA 02458
Tel: 617-816-0722
Email:edmond@spruhaneng.com

190 UPLAND AVENUE
NEWTON
MASSACHUSETTS

SURVEY PLAN

REVISION BLOCK

DESCRIPTION	DATE

All legal rights including, but not limited to, copyright and design patent rights, in the designs, arrangements and plans shown on this document are the property of Spruhan Engineering, P.C. They may not be used or reused in whole or in part, except in connection with this project, without the prior written consent of Spruhan Engineering, P.C.. Written dimensions on these drawings shall have precedence over scaled dimensions. Contractors shall verify and be responsible for all dimensions and conditions on this project, and Spruhan Engineering, P.C., must be notified of any variation from the dimensions and conditions shown by these drawings.

COMMONWEALTH OF MASSACHUSETTS
CHRISTOPHER C. CHARLTON
NO. 48649
PROFESSIONAL LAND SURVEYOR

DATE:	7/14/2022
DRAWN BY:	DK
CHECKED BY:	E.S.
APPROVED BY:	C.C

EXISTING CONDITIONS

SHEET 1 OF 5

LEGEND

SS	SEWER LINE
Ⓢ	SEWER MANHOLE
W	WATER LINE
G	GAS LINE
	UTILITY POLE
GV	GAS VALVE
E	OVERHEAD ELECTRIC SERVICE
WV	WATER VALVE
□	CATCH BASIN
	FENCE
205	CONTOUR LINE (MJR)
195	CONTOUR LINE (MNR)
X	SPOT GRADE
Ⓓ	DRAIN MANHOLE
	HYDRANT
	TREE

NOTES:

1. INFORMATION SHOWN ON THIS PLAN IS THE RESULT OF A FIELD SURVEY PERFORMED BY SPRUHAN ENGINEERING, P.C. AS OF 10/13/2021.

2. DEED REFERENCE: BOOK 1159, PAGE 183

MIDDLESEX COUNTY DISTRICT REGISTRY OF DEEDS

3. THIS PLAN IS NOT INTENDED TO BE RECORDED.

4. I CERTIFY THAT THE DWELLING SHOWN IS LOCATED WITHIN A SPECIAL FLOOD HAZARD ZONE. IT IS LOCATED IN ZONE AE, ON FLOOD HAZARD BOUNDARY MAP NUMBER 25017C0554E, DATED 06/04/2010.
THE 100–YEAR FLOOD ELEVATION AT THE SITE IS 112 NAVD88 = 118.8 CITY OF NEWTON DATUM.

5. THIS PLAN DOES NOT SHOW ANY UNRECORDED OR UNWRITTEN EASEMENTS WHICH MAY EXIST. A REASONABLE AND DILIGENT ATTEMPT HAS BEEN MADE TO OBSERVE ANY APPARENT USES OF THE LAND; HOWEVER THIS NOT CONSTITUTE A GUARANTEE THAT NO SUCH EASEMENTS EXIST.

6. FIRST FLOOR ELEVATIONS ARE TAKEN AT THRESHOLD.

7. NO RESPONSIBILITY IS TAKEN FOR ZONING TABLE AS SPRUHAN ENGINEERING, P.C. ARE NOT ZONING EXPERTS. TABLE IS TAKEN FROM TABLE PROVIDED BY LOCAL ZONING ORDINANCE. CLIENT AND/OR ARCHITECT TO VERIFY THE ACCURACY OF ZONING ANALYSIS.

8. THE ELEVATIONS SHOWN ARE BASED ON CITY OF NEWTON DATUM.

9.ZONING INFORMATION: SR2 (SINGLE RESIDENCE 2), LOT WAS RECORDED BEFORE 7 DECEMBER 1953

FLOODPLAIN IMPACT & MITIGATION SUMMARY

ELEVATION (FT)	FLOODPLAIN IMPACT (CF)	FLOOD MITIGATION (CF)	FLOODPLAIN NET (CF)
113-114	0.4	56.0	-55.6
114-115	14.9	72.6	-57.8
115-116	19.4	50.5	-31.1
116-117	1096.8	1175.4	-78.6
117-118	1263.3	1358.2	-94.9
118-118.8	950.6	988.7	-38.1
TOTALS	**3345.4**	**3701.4**	**-356.0**

FLOODPLAIN NET = FLOODPLAIN CUT - FLOODPLAIN FILL;

FLOODPLAIN FILL IT'S SUM OF FILL VOLUME FROM TABLE BELOW FOR PROPOSED BUILDING AND PIERS;

FLOODPLAIN CUT IT'S SUM OF CUT VOLUME FROM TABLE BELOW FOR EXISTING BUILDING.

FOR EXIST. BUILDING (FOUNDATION, GARAGE, PIERS, STEPS)

ELEVATION (FT)	CUT AREA (SF)	HEIGHT (FT)	CUT VOLUME (CF)	
113-114	0.0	0.0	0.0	
114-115	12.8	0.3	3.8	(WOODEN RET. WALL)
115-116	28.8	0.4	11.5	(BH, AC, PIERS, CONC. STEPS)
116-117	1159.0	1.0	1159.0	(FOUNDATION, PIERS, CONC. STEPS)
117-118	1239.0	1.0	1239.0	(FOUNDATION, PIERS, STEPS)
118-118.8	1231.0	0.8	984.8	(FOUNDATION, PIERS, STEPS)
TOTAL			**3398.1**	

FOR PROPOSED GRADE (CUT)

ELEVATION (FT)	CUT AREA (SF)	HEIGHT (FT)	CUT VOLUME (CF)
113-114	140.0	0.4	56.0
114-115	172.0	0.4	68.8
115-116	195.0	0.2	39.0
116-117	82.0	0.2	16.4
117-118	298.0	0.4	119.2
118-118.8	39.0	0.1	3.9
TOTAL			**303.3**

FOR PROPOSED BUILDING (FOUNDATION, GARAGE)

ELEVATION (FT)	FILL AREA (SF)	HEIGHT (FT)	FILL VOLUME (CF)	
113-114	0.8	0.1	0.1	(STEPS)
114-115	5.0	1.0	5.0	(STEPS)
115-116	5.0	1.0	5.0	(STEPS)
116-117	1078.0	1.0	1078.0	(STEPS, FOUNDATION, GARAGE, WW)
117-118	1244.0	1.0	1244.0	(STEPS, FOUNDATION, GARAGE, DRIVEWAY, WW)
118-118.8	1169.0	0.8	935.2	(STEPS, FOUNDATION, GARAGE, DRIVEWAY,WW)
TOTAL			**3267.4**	

FOR PROPOSED BUILDING (PIERS)

ELEVATION (FT)	FILL AREA (SF)	HEIGHT (FT)	FILL VOLUME (CF)
113-114	1.8	0.2	0.4
114-115	9.8	1.0	9.8
115-116	14.3	1.0	14.3
116-117	18.8	1.0	18.8
117-118	19.3	1.0	19.3
118-118.8	19.3	0.8	15.4
TOTAL			**78.0**

Pier = 8" x 8" = 0.44
Pier = 16" x 16" = 2.25

ZONING LEGEND

ZONING DISTRICT: SINGLE RESIDENCE 2
(LOT CREATED BEFORE 12/07/1953)

	REQUIRED	PROPOSED
MIN. AREA	10,000 S.F	10,120 S.F. ±
MIN. FRONTAGE	80'	80'
MIN. YARD FRONT	25'	25.3'
SIDE	7.5'	8.2'
REAR	15'	111.4'
MAX. LOT COV.	30%	19.18%±
MIN. OPEN SPACE	50%	75.09%±
MAX. BLDG. HEIGHT	36'	33.88'±

NOTE: CONTRACTOR TO ENSURE ALL RAIN WATER FROM SPLASH BLOCKS (IF ANY) IS DIVERTED AWAY FROM BUILDING FOUNDATION AND DIVERTED AWAY FROM NEIGHBORING PROPERTIES

NOTE: CONTRACTOR TO ENSURE THAT THE BUILDING FOOTPRINT REPRESENTED ON THIS PLAN IS THE SAME AS THE PROPOSED ARCHITECTURAL /STRUCTURAL PLANS AND INCORPORATES ALL OVERHANGS, CANTILEVERS AND ANY COMPONENT THAT IS SUBJECT TO ZONING RESTRICTIONS. IF THIS IS FOUND NOT TO BE THE CASE THE CONTRACTOR MUST CONTACT THE ENGINEER /SURVEYOR AND REQUEST A REVISED PLAN WHICH MUST BE RESUBMITTED TO I.S.D. CITY OF NEWTON

NOTE: DRAINAGE SYSTEM IS DESIGNED FOR 100 YEAR STORM EVENT FOR ALL RUNOFF FROM PROPOSED IMPERVIOUS AREAS SHOWN. CONTRACTOR SHALL NOT CONNECT SUMP PUMP TO THE SYSTEM WITHOUT APPROVAL FROM ENGINEERING DEPARTMENT.

NOTE: SURFACE WATER TO BE DIVERTED FROM ALL SIDES OF FOUNDATION WALL

NOTE: SPRUHAN ENGINEERING, P.C., ACCEPTS NO LIABILITY FOR GROUND WATER OR OTHER SURFACE WATER IN BASEMENT

NOTE: ANY PROPOSED RETAINING WALL IN SETBACK SHALL NOT EXCEED 4 FEET IN HEIGHT IN REFERENCE TO EXISTING GRADES.

NOTE: CONTRACTOR TO CONFIRM LOCATION OF DOWN SPOUTS PRIOR TO CARRYING OUT ANY DRAINAGE WORKS

NOTE: ANY PROPOSED RETAINING WALLS SHALL BE DESIGNED BY OTHERS.

NOTE: CONTRACTOR TO ENSURE SEWER LINE IS PITCHED AT AN EQUAL SLOPE OF BETWEEN 2% AND 10% FROM HOUSE TO MAIN CONNECTION

NOTE: SEWER AND WATER MAIN LINE LOCATION TO BE CONFIRMED BY CONTRACTOR

NOTE: ANY TREE BEING REMOVED SHALL COMPLY WITH CITY OF NEWTON TREE ORDINANCE

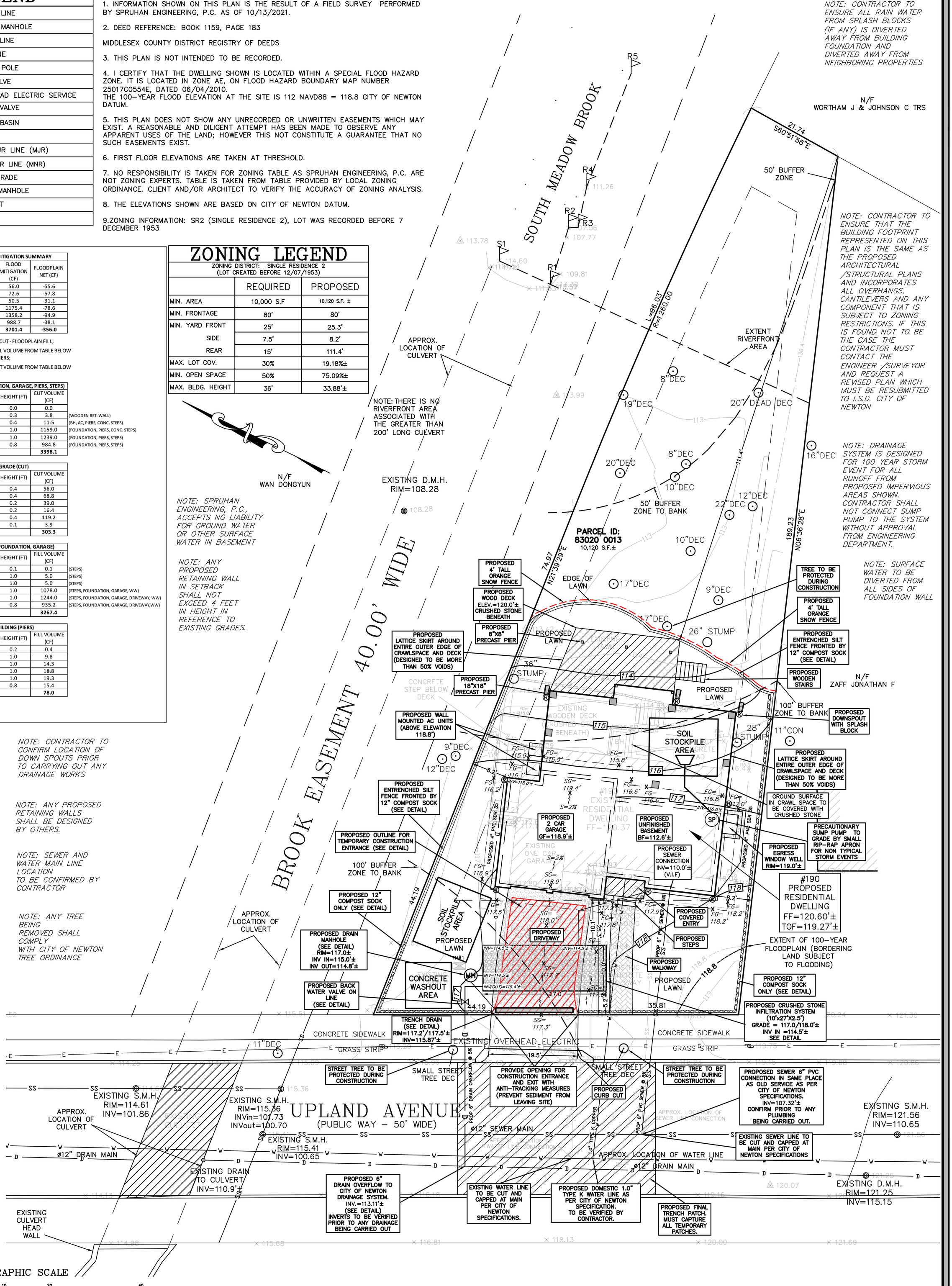

NOTE: THE RIVERFRONT AREA ACROSS THE STREET FROM SITE IS NOT SHOWN ON THIS PLAN

COMMONWEALTH OF MASSACHUSETTS CHRISTOPHER C. CHARLTON NO. 48649 PROFESSIONAL LAND SURVEYOR

Spruhan Engineering, P.C.
80 JEWETT ST, (SUITE 2)
NEWTON, MA 02458
Tel: 617-816-0722
Email:edmond@spruhaneng.com

190 UPLAND AVENUE
NEWTON
MASSACHUSETTS

CIVIL PLAN

REVISION BLOCK

DESCRIPTION	DATE

All legal rights including, but not limited to, copyright and design patent rights, in the designs, arrangements and plans shown on this document are the property of Spruhan Engineering, P.C. They may not be used or reused in whole or in part, except in connection with this project, without the prior written consent of Spruhan Engineering, P.C.. Written dimensions on these drawings shall have precedence over scaled dimensions. Contractors shall verify and be responsible for all dimensions and conditions on this project, and Spruhan Engineering, P.C., must be notified of any variation from the dimensions and conditions shown by these drawings.

COMMONWEALTH OF MASSACHUSETTS EDMOND T. SPRUHAN CIVIL No. 53316 REGISTERED PROFESSIONAL ENGINEER

DATE:	7/14/2022
DRAWN BY:	O.G.
CHECKED BY:	C.C.
APPROVED BY:	E.S.

CIVIL PLAN

SHEET 2 OF 5

DEEP OBSERVATION HOLE LOG:

GENERAL SOIL CONDITIONS FOR THE AREA PERFORMED AT 106 RIVER ST, NEWTON, MA BY SPRUHAN ENGINEERING P.C.
SOIL EVALUATOR: EDMOND SPRUHAN (#14235)

DATED: 06/01/22
HOLE NUMBER: 1

GENERAL SITE CONDITIONS: GRASS & TREES.

HOLE LOG #1

DEPTH	ELEVATION	HORIZON	TEXTURE	COLOR	MOTTLING	OTHER
0" – 12"	116.5'± – 115.5'±	Ap	–	–	–	–
12" – 36"	115.5'± – 113.5'±	Bw	Coarse Sand	–	–	–
36" – 108"	113.5'± – 107.5'±	C1	Peat	–	@110.5'	–
108" – 156"	107.5'± – 103.5'±	C2	Silt Loam	–	@110.5'	–

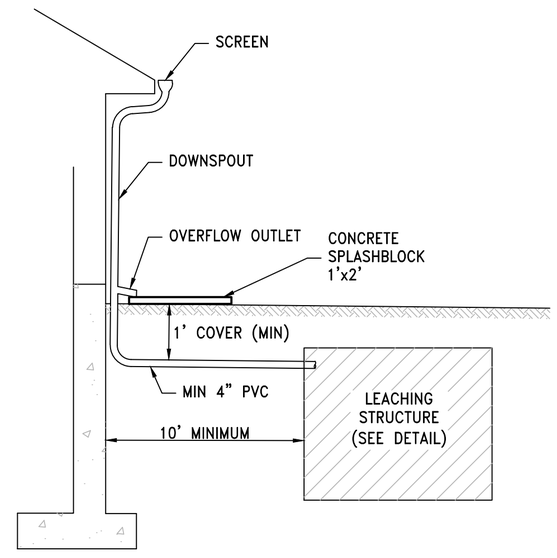

TYPICAL DOWNSPOUT DETAIL
N.T.S.

DRAINAGE AREA SUMMARY

EXISTING ROOF = 1,138.11 S.F.
EXISTING PAVED DRIVEWAY = 267.20 S.F.
EXISTING WALKWAY = 91.41 S.F.
EXISTING DECK = 413.06 S.F.
EXISTING LANDING AND STEPS = 66.83 S.F.
EXISTING LANDSCAPE AREA = 8,143.39 S.F.

PROPOSED ROOF = 1,906.92 S.F.
PROPOSED PAVED DRIVEWAY = 512.51 S.F.
PROPOSED WALKWAY = 120.86 S.F.
PROPOSED COVERED ENTRY = 34.42 S.F.
PROPOSED WOOD DECK = 318.57 S.F.
PROPOSED EGRESS WW = 31.94 S.F.
PROPOSED LANDING/STEPS = 35.57 S.F
PROPOSED LANDSCAPE AREA = 7,159.21 S.F.

TOTAL EXISTING IMPERVIOUS AREA = 1,976.61 S.F.
TOTAL PROPOSED IMPERVIOUS AREA = 2,960.79 S.F.

TOTAL INCREASE IN IMPERVIOUS AREA = 984.18 S.F.

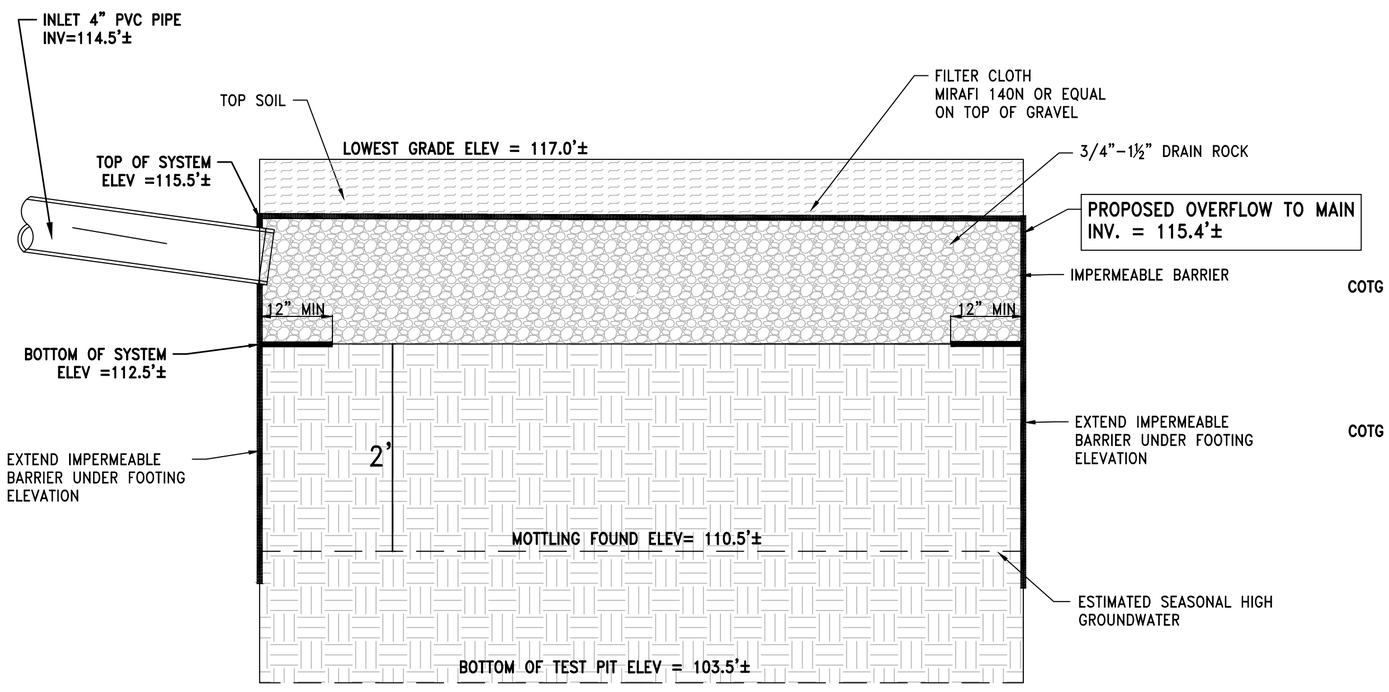

SECTION A–A VIEW

SECTION DETAIL FOR DRAINAGE SYSTEMS
N.T.S.

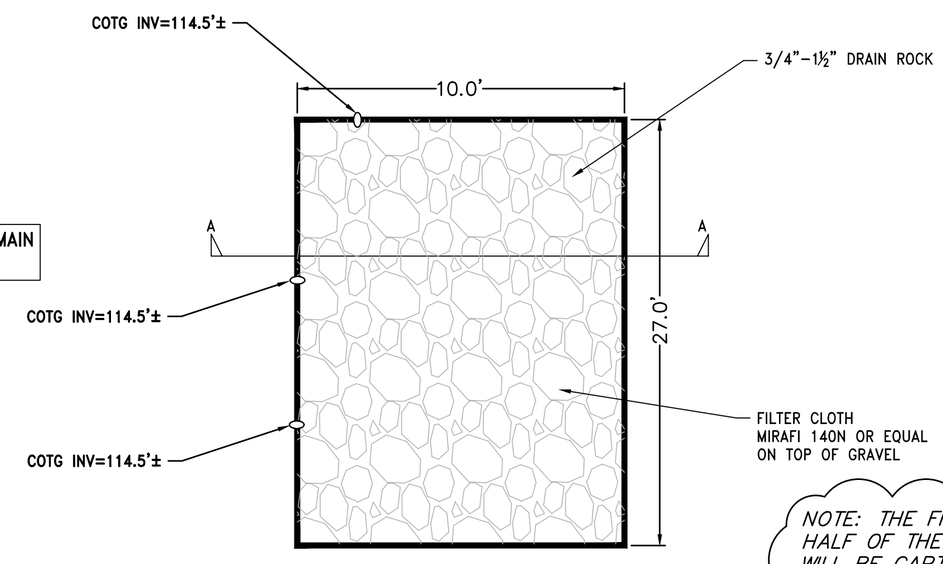

PLAN VIEW

DRAINAGE SYSTEM DETAIL
N.T.S.

NOTE: THE FRONT HALF OF THE ROOF WILL BE CAPTURED IN THE SYSTEM, THE REAR HALF WILL GO TO THE GRADE.

NOTE: ALL PEAT EXTRACT UNDER THE INFILTRATION SYSTEM MUST BE REMOVED.

DRAINAGE SYSTEM NOTES:

1. ENTIRE SYSTEM SHALL BE ENCASED IN FILTER FABRIC.
2. LOCATION OF SYSTEM PER PLANS.
3. DESIGN ENGINEER WILL INSPECT AND CERTIFY IN WRITING THAT ALL DRAINAGE WORK WAS INSTALLED IN ACCORDANCE WITH APPROVED PLANS. CONTRACTOR TO NOTIFY ENGINEER AT LEAST 72 HOURS IN ADVANCE FOR DRAINAGE SYSTEM INSPECTION PRIOR TO BACKFILLING.

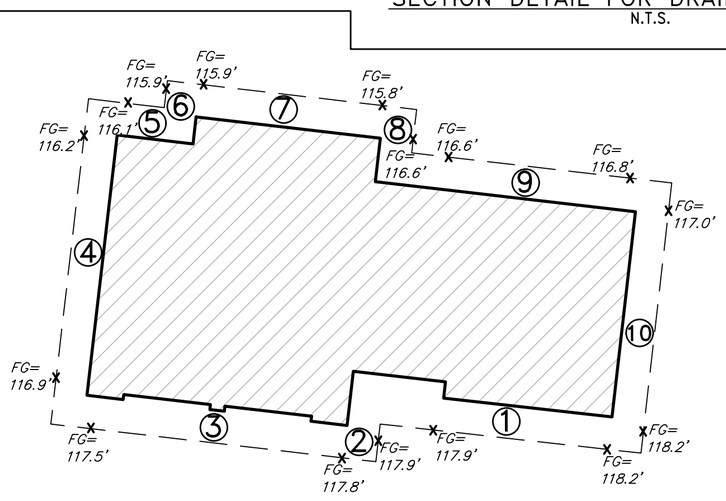

AVERAGE GRADE PLANE (ALL UNITS IN FEET)					
SEGMENT	LENGTH	POINT 1	POINT 2	MEAN 1 & 2	MEAN x LENGTH
1	24.00	118.20	117.90	118.05	2,833.20
2	5.00	117.90	117.90	117.90	589.50
3	24.00	117.80	117.50	117.65	2,823.60
4	24.00	116.90	116.20	116.55	2,797.20
5	7.00	116.20	116.10	116.15	813.05
6	2.50	116.10	115.90	116.00	290.00
7	17.00	115.90	115.80	115.85	1,969.45
8	4.00	115.80	116.60	116.20	464.80
9	24.00	116.60	116.80	116.70	2,800.80
10	18.90	117.00	118.20	117.60	2,222.64
SUM =	150.40				17,604.24
SUM OF MEAN x LENGTH/SUM OF LENGTHS = AVERAGE GRADE PLANE =					**117.05**

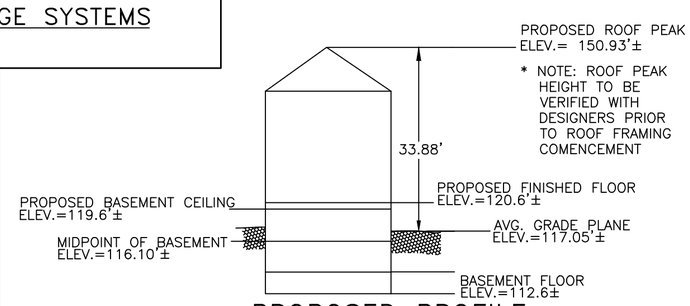

PROPOSED PROFILE
NOT TO SCALE

* MIDPOINT OF BASEMENT ELEVATION LOWER THAN AVERAGE GRADE ELEVATION THEREFORE PROPOSED BASEMENT MEETS DEFINITION OF BASEMENT

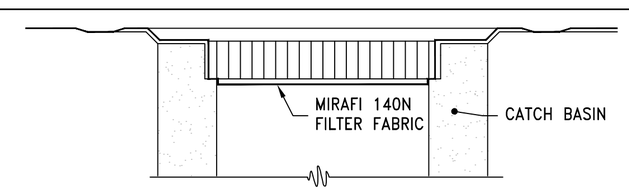

INSPECTION AND MAINTENANCE:

1. FILTER FABRIC BARRIERS SHALL BE INSPECTED WEEKLY AFTER EACH SIGNIFICANT STORM – 1 INCH RAINFALL (25.4 MM) IN 24 HOUR PERIOD. ANY REQUIRED REPAIRS SHALL BE MADE IMMEDIATELY.
2. SEDIMENT SHOULD BE REMOVED WHEN IT REACHES 0.5" MAXIMUM HEIGHT. AT THAT TIME INSPECT THE FILTER MATERIAL FOR TEARS AND CLEAN OR REPLACE AS REQUIRED.
3. THE REMOVED SEDIMENT SHALL BE DISTRIBUTED EVENLY ACROSS AREAS ON–SITE, CONFORM WITH THE EXISTING GRADE AND BE REVEGETATED OR OTHERWISE STABILIZED PER EROSION CONTROL NOTES.

CATCH BASIN PROTECTION
NTS

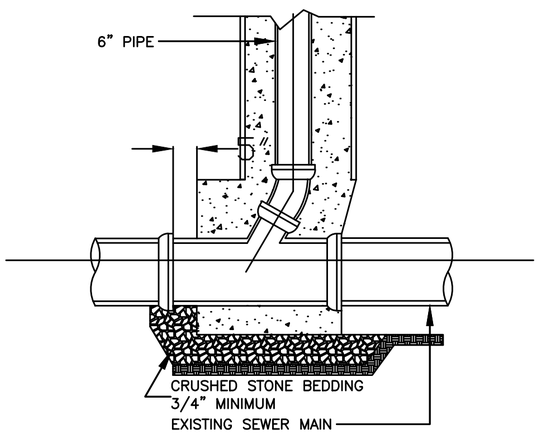

TYPICAL SEWER CONFIGURATION

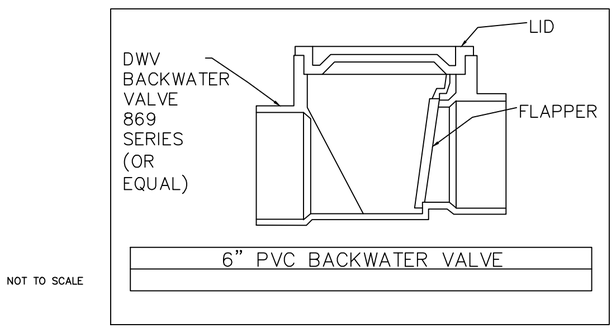

NOT TO SCALE

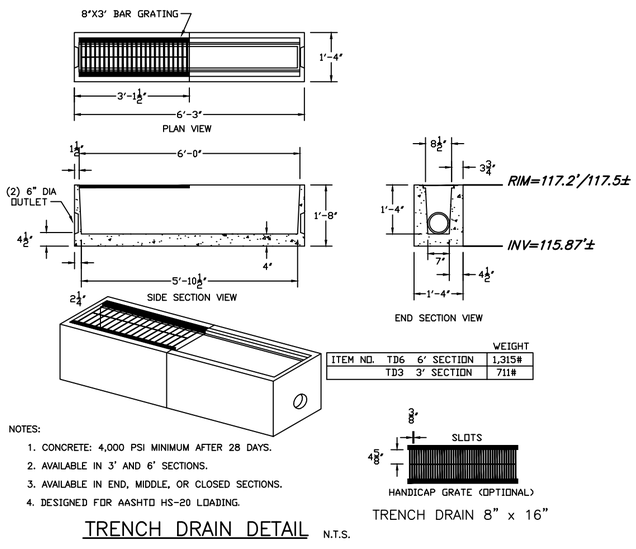

NOTES:
1. CONCRETE: 4,000 PSI MINIMUM AFTER 28 DAYS.
2. AVAILABLE IN 3' AND 6' SECTIONS.
3. AVAILABLE IN END, MIDDLE, OR CLOSED SECTIONS.
4. DESIGNED FOR AASHTO HS-20 LOADING.

TRENCH DRAIN DETAIL N.T.S.

TRENCH DRAIN 8" x 16"

NOTES

1. ELEVATIONS REFER TO CITY OF NEWTON DATUM.
2. THE LOCATIONS AND ELEVATIONS OF ALL EXISTING UTILITIES SHALL BE CONSIDERED APPROXIMATE AND MUST BE VERIFIED BY THE CONTRACTOR PRIOR TO ANY CONSTRUCTION. THE CONTRACTOR SHALL VERIFY THE LOCATIONS OF ANY CROSSINGS OF PROPOSED AND EXISTING UTILITIES.
3. MASSACHUSETTS STATE LAW REQUIRES UTILITY NOTIFICATION AT LEAST THREE BUSINESS DAYS PRIOR TO CONSTRUCTION. THE CONTRACTOR SHALL CALL DIG–SAFE AT 1–888–344–7233 IN ORDER TO COMPLY WITH STATE LAW.
4. ALL UTILITY CONSTRUCTION SHALL CONFORM TO THE CITY OF NEWTON GENERAL CONSTRUCTION DETAILS, LATEST EDITION, PREPARED AND ISSUED BY THE NEWTON ENGINEERING DEPARTMENT. COPIES MAY BE OBTAINED AT THE OFFICE OF THE CITY ENGINEER. REFER TO NOTE 29 FOR DETAILS. NOTE: A TRENCH PERMIT MUST BE OBTAINED PRIOR TO ANY EXCAVATION BEING CARRIED OUT.
5. PROPOSED SEWER PIPE SHALL BE 6" PVC SDR 35.
6. PROPOSED WATER SERVICE SHALL BE 1" TYPE K COPPER.
7. THIS PLAN IS THE RESULT OF AN INSTRUMENT SURVEY DONE ON THE GROUND ON **OCTOBER 13TH, 2021.**
8. ALL WORK SHALL BE SUBJECT TO THE INSPECTION BY AND APPROVAL OF THE CITY ENGINEER.
9. NO EXCAVATION SHALL BE MADE BY THE CONTRACTOR IN ANY PUBLIC WAY OR UTILITY EASEMENT UNLESS AT LEAST FORTY–EIGHT (48) HOURS, EXCLUSIVE OF SATURDAYS, SUNDAYS, AND HOLIDAYS, BEFORE THE PROPOSED EXCAVATION IS TO BE MADE, HE HAS SUBMITTED, NOTICE OF THE PROPOSED EXCAVATION TO THE FOLLOWING:
   a. SUCH PUBLIC UTILITY COMPANIES AS SUPPLY GAS, ELECTRICITY, AND TELEPHONE SERVICE IN THE CITY.
   b. SUCH PRIVATE COMPANIES AS PROVIDE CABLE TELEVISION SERVICE IN THE CITY.
   c. CITY OF NEWTON WATER & SEWER DEPARTMENT. SUCH NOTICE SHALL SET FORTH THE STREET NAME AND A REASONABLY ACCURATE DESCRIPTION OF THE LOCATION OF THE EXCAVATION.
10. THE CONTRACTOR SHALL PROVIDE CITY OF NEWTON POLICE OFFICERS FOR THE DIRECTION AND CONTROL OF TRAFFIC, AS REQUIRED BY THE CITY ENGINEER.
11. NO WORK SHALL BE PERFORMED UNTIL THE NECESSARY PERMITS ARE OBTAINED FROM THE CITY OF NEWTON PUBLIC WORKS DEPARTMENT.
12. ALL TRENCHES IN PAVED STREETS SHALL BE TEMPORARILY PATCHED WITH PAVEMENT OF EXISTING PAVEMENT THICKNESS OR AS DIRECTED BY THE CITY ENGINEERING INSPECTOR, LAID HOT AND MAINTAINED UNTIL THE PERMANENT PATCH IS INSTALLED.
13. WARNING SIGNS SHALL CONFORM TO PAGE 66 OF THE CITY OF NEWTON GENERAL CONSTRUCTION DETAILS.
14. ALL TOPSOIL, SUBSOIL OR IMPERVIOUS SOIL MUST BE EXCAVATED AND REMOVED BELOW THE LEACHING SYSTEM AND TO A DISTANCE 5' LATERALLY IN ALL DIRECTIONS BEYOND THE SIDES OF THE GALLEYS. BACKFILL AS REQUIRED WITH A CLEAN GRANULAR SAND, FREE FROM ORGANIC MATTER AND DELETERIOUS SUBSTANCES. THE SAND SHALL HAVE A PERCOLATION RATE OF 2 MINUTES PER INCH OR FASTER.
15. IN CASES WHERE LEDGE OR BOULDERS ARE ENCOUNTERED, SPRUHAN ENGINEERING, P.C. WILL NOT BE RESPONSIBLE FOR THE AMOUNT OF ROCK ENCOUNTERED.
16. IF ANY PART OF THIS DESIGN IS TO BE ALTERED IN ANY WAY, THE DESIGN ENGINEER, AS WELL AS THE APPROVING AUTHORITIES, SHALL BE NOTIFIED IN WRITING BEFORE CONSTRUCTION.
17. THE ROOF RUNOFF FROM THE ROOF SURFACES SHALL BE COLLECTED BY GUTTERS AND DIRECTED TO THE STORM WATER DRAINAGE SYSTEM,
18. PRIOR TO AN OCCUPANCY PERMIT BEING ISSUED, AN AS–BUILT PLAN SHOULD BE SUBMITTED TO THE ENGINEERING DIVISION IN BOTH DIGITAL FORMAT AND HARD COPY. THE PLAN SHOULD SHOW ALL UTILITIES AND FINAL GRADES, TIES TO ALL GATES, VALVES, CLEAN–OUTS, CONNECTION POINTS AT MAINS, STRUCTURE ACCESS/MAINTENANCE COVERS, ANY EASEMENTS AND FINAL GRADING.
19. THE APPLICANT WILL HAVE TO APPLY FOR A STREET OPENING & UTILITIES CONNECTION PERMITS AS WELL AS A SIDEWALK CROSSING PERMIT AND A TRENCH PERMIT WITH THE DPW.
20. THE CONTRACTOR IS RESPONSIBLE FOR NOTIFYING THE DESIGN ENGINEER FOR INSPECTIONS OR AS–BUILT LOCATIONS. PETER NOLAN & ASSOCIATES, LLC. WILL NOT PROVIDE AS–BUILT CERTIFICATION TO UNINSPECTED BACKFILLED UTILITIES. A MINIMUM OF 48 HOURS NOTICE IS REQUIRED PRIOR TO INSPECTIONS.
21. ANY PROPOSED PVC PIPES UNDER PAVING OR CONCRETE WITH LESS THAN 30" OF COVER MUST MUST BE ENCASED IN CONCRETE. (SEE PAGE 21, CITY OF NEWTON GENERAL CONSTRUCTION DETAILS.)
22. THE EXISTING WATER & SEWER SERVICES SHALL BE CUT AND CAPPED AT THE MAIN AND BE COMPLETELY REMOVED FROM THE SITE, REPLACED AS SPECIFIED AND PROPERLY BACKFILLED. THE ENGINEERING DIVISION MUST INSPECT THIS WORK; FAILURE TO HAVE THIS WORK INSPECTED MAY RESULT IN THE DELAY OF ISSUANCE OF THE UTILITY CONNECTION PERMIT.
23. THE CONTRACTOR SHALL NOTIFY THE ENGINEERING DIVISION 48 HOURS IN ADVANCE AND SCHEDULE AN APPOINTMENT TO HAVE THE DRAINAGE SYSTEM, WATER & SEWER SERVICES INSPECTED. THE SYSTEM & UTILITIES MUST BE FULLY EXPOSED FOR THE INSPECTOR. ONCE THE INSPECTOR IS SATISFIED, THE SYSTEM & UTILITIES MAY THEN BE BACKFILLED.
24. THE EXISTING CONTOURS OF THE LAND ARE NOT TO BE ALTERED BY MORE THAN THREE (3) FEET AS A RESULT OF THE PLACEMENT OR REMOVAL OF SOD, LOAM, CLAY, GRAVEL OR STONE, OR OTHER SOLID MATERIAL UNLESS A PROPOSED RETAINING WALL OR SWALE IS INSTALLED AFTER IT IS APPROVED BY BOTH CITY OF NEWTON ENGINEERING DEPARTMENT & CITY OF NEWTON I.S.D
25. NO WORK IS ALLOWED WITHIN A CITY OF NEWTON RIGHT–OF–WAY BETWEEN NOVEMBER 15TH AND APRIL 15TH. IF AN EMERGENCY EXISTS OR THERE ARE EXTENUATING CIRCUMSTANCES, APPLICANT MAY REQUEST PERMISSION FROM THE CITY ENGINEER. IF ALLOWED, SPECIAL CONSTRUCTION REQUIREMENTS WILL BE REQUIRED, AND AS SUCH IT IS RECOMMENDED THAT THE APPLICANT OR APPLICANT'S REPRESENTATIVE CONTACT THE CITY OF NEWTON ENGINEERING DEPARTMENT PRIOR TO START OF WORK FOR CLARIFICATION.
26. AT THE END OF CONSTRUCTION, ALL DRAINAGE STRUCTURES ARE TO BE CLEANED OF SILT, STONES AND OTHER DEBRIS.
27. DURING CONSTRUCTION, THE EROSION CONTROL MEASURES SHALL BE INSPECTED ONCE PER WEEK AND WITHIN 24 HOURS OF ANY STORM EVENT GENERATING MORE THAN 1/2" OF RAINFALL. THE EROSION CONTROL MEASURES SHALL BE CLEANED REGULARLY AND ADJUSTED IF NECESSARY TO ENSURE THAT NO SILT OR DEBRIS LEAVES THE SITE.
28. WITH EXCEPTION OF GAS UTILITY SERVICES, ALL UTILITY TRENCHES WITHIN ANY CITY OF NEWTON RIGHT–OF–WAY WILL BE BACKFILLED WITH TYPE IE (EXCAVATABLE) CONTROLLED DENSITY FILL, AS SPECIFIED BY THE CITY OF NEWTON ENGINEERING SPECIFICATIONS.
29. ALL CONSTRUCTION ACTIVITIES WITHIN THE CITY OF NEWTON RIGHT–OF–WAY MUST FULLY COMPLY WITH ALL OF CITY OF NEWTON CONSTRUCTION SPECIFICATIONS AS WELL AS 521 CMR 21.00 AND 22.00.
30. ALL NEW SEWER SERVICE AND/OR STRUCTURES SHALL BE PRESSURE TESTED OR VIDEOTAPED AFTER FINAL INSTALLATION IS COMPLETE. METHOD OF FINAL INSPECTION SHALL BE DETERMINED SOLELY BY THE CONSTRUCTION INSPECTOR FROM THE CITY ENGINEERING DIVISION. ALL SEWER MANHOLES SHALL BE VACUUM TESTED IN ACCORDANCE TO THE CITY'S CONSTRUCTION STANDARDS & SPECIFICATIONS. THE SEWER SERVICE WILL NOT BE ACCEPTED UNTIL ONE OF THE TWO METHODS STATED ABOVE IS COMPLETED. ALL TESTING MUST BE WITHNESSED BY A REPRESENTATIVE OF THE ENGINEERING DIVISION, A CERTIFICATE OF OCCUPANCY WILL NOT BE RECOMMENDED UNTIL THIS TEST IS COMPLETED AND A WRITTEN REPORT IS RECEIVED BY THE CITY ENGINEER.
31. ALL SILTATION CONTROL NEEDS TO BE INSTALLED PRIOR TO ANY CONSTRUCTION. THE CONTRACTOR SHALL CONTACT THE CITY ENGINEER'S OFFICE FOR APPROVAL PRIOR TO COMMENCEMENT.
32. ALL TRENCH EXCAVATION CONTRACTORS SHALL COMPLY WITH MGL CHAPTER 82A, TRENCH EXCAVATION SAFETY REQUIREMENTS, TO PROTECT THE GENERAL PUBLIC FROM UNAUTHORIZED ACCESS TO UNATTENDED TRENCHES. A TRENCH EXCAVATION PERMIT IS REQUIRED.
33. APPROVAL OF THIS PLAN BY CITY OF NEWTON ENGINEERING DIVISION IMPLIES THAT THE PLAN MEETS THE MINIMAL DESIGN STANDARDS OF THE CITY OF NEWTON. HOWEVER, THE ENGINEERING DIVISION MAKES NO REPRESENTATION AND ASSUMES NO RESPONSIBILITY FOR THE DESIGN(S) IN TERMS OF SUITABILITY FOR THE PARTICULAR SITE CONDITIONS OR OF THE FUNCTIONABILITY OR PERFORMANCE OF ANY ITEMS CONSTRUCTED IN ACCORDANCE WITH THE DESIGN(S). THE CITY OF NEWTON ASSUMES NO LIABILITIES FOR DESIGN ASSUMPTION, ERRORS OR OMISSIONS BY THE ENGINEER OF RECORD.
34. PER CITY OF NEWTON ORDINANCE NO.B–42, COUNCIL ITEM #251–19, BUILDING SEWER, WATER SERVICE PIPE & SIDEWALK/CURB REPLACEMENT ORDINANCE. THE APPLICANT IS REQUIRED TO INSTALL/REPLACE SIDEWALK & CURB ALONG THE ENTIRE FRONTAGE. THIS SHALL INCLUDE APPROPRIATE TRANSITION TO ADJOINING CURBING & WALKWAYS, INCLUDING ACCESSIBLE CURB CUTS & OTHER ACCESS AS REQUIRED. THE ENGINEERING CONSTRUCTION INSPECTOR MAKES A DETERMINATION, BASED ON THE MATERIAL & MANNER OF CONSTRUCTION OF THE EXISTING SIDEWALK & CURB, THAT THE EXISTING SIDEWALK & CURB HAS THE ABILITY TO BE RE–SET OR REUSED WITHOUT REPLACEMENT.
35. THE ENGINEER OF RECORD IS RESPONSIBLE FOR THE ON–SITE INSPECTION(S) OF ALL SUBSURFACE STRUCTURES. THIS INCLUDES BUT IS NOT LIMITED TO DRAINAGE, UTILITIES (INCLUDING SEWER PIPE SLOPE), ROOF LEADER COLLECTION SYSTEM, TRENCH DRAINS, MANHOLES ETC. ENGINEER OF RECORD MUST ALSO CONDUCT "BOTTOM OF HOLE" INSPECTION(S) PRIOR TO SUBSURFACE DRAINAGE SYSTEM(S) BEING INSTALLED. CONTRACTOR TO NOTIFY ENGINEER BEFORE BACKFILL OR SIGN OFF CANNOT OCCUR WITHOUT RE–EXCAVATION.
36. PRIOR TO THE ENGINEERING DIVISION RECOMMENDING THAT A CERTIFICATE OF OCCUPANCY BE ISSUED, AN AS–BUILT PLAN MUST BE SUBMITTED. THE AS–BUILT PLAN MUST SHOW DIMENSIONAL TIES FROM FIXED POINTS (FOUNDATION CORNERS) TO ALL SUBSURFACE COMPONENTS AS WELL AS FINAL GRADING. THE AS–BUILT PLAN MUST BE STAMPED, SIGNED & DATED BY THE ENGINEER OF RECORD.
THE FOLLOWING STATEMENT MUST BE ON ALL AS–BUILT PLANS SUBMITTED TO THE ENGINEERING DIVISION:
I CERTIFY THAT THE CONSTRUCTION SO SHOWN WAS INSPECTED PRIOR TO BACKFILL & THAT ALL WORK CONFORMS WITH THE APPROVED PLAN & MEETS OR EXCEEDS THE CITY OF NEWTON CONSTRUCTION STANDARDS.

SIGNATURE: _____ DATE _____.

37. 5 YEAR MORATORIUM – IF AT TIME OF CONSTRUCTION THE ROADWAY IS UNDER A 5 YEAR MORATORIUM, THE ROADWAY MUST BE MILLED & PAVED GUTTER–TO–GUTTER FOR A DISTANCE OF 25 FEET IN EACH DIRECTION FROM THE OUTERMOST TRENCHES OR AS DIRECTED BY THE ENGINEERING INSPECTOR.

Spruhan Engineering, P.C.
80 JEWETT ST, (SUITE 2)
NEWTON, MA 02458
Tel: 617-816-0722
Email:edmond@spruhaneng.com

190 UPLAND AVENUE
NEWTON
MASSACHUSETTS

DETAILS

REVISION BLOCK

DESCRIPTION	DATE

All legal rights including, but not limited to, copyright and design patent rights, in the designs, arrangements and plans shown on this document are the property of Spruhan Engineering, P.C. They may not be used or reused in whole or in part, except in connection with this project, without the prior written consent of Spruhan Engineering, P.C.. Written dimensions on these drawings shall have precedence over scaled dimensions. Contractors shall verify and be responsible for all dimensions and conditions on this project, and Spruhan Engineering, P.C., must be notified of any variation from the dimensions and conditions shown by these drawings.

COMMONWEALTH OF MASSACHUSETTS
EDMOND J. SPRUHAN
CIVIL
No. 53316
REGISTERED PROFESSIONAL ENGINEER
Edmond J. Spruhan

DATE:	7/14/2022
DRAWN BY:	O.G.
CHECKED BY:	C.C.
APPROVED BY:	E.S.

CIVIL PLAN

SHEET 3 OF 5

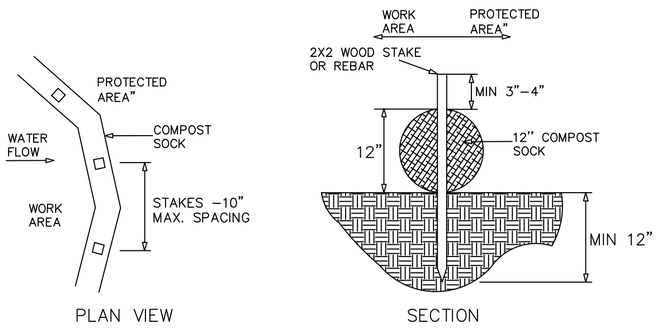

COMPOST SOCK SHOULD BE INSTALLED AS PER MANUFACTURERS RECOMMENDATIONS AND WHERE SHOWN ON THE PLAN.

NOTES:
1. ALL MATERIALS TO MEET SPECIFICATION.
2. SILT SOCK COMPOST/SOIL/ROCK/SEED FILL TO MEET APPLICATION REQUIREMENTS.
3. SILT SOCK DEPICTED IS FOR MINIMUM SLOPES. GREATER SLOPES MAY REQUIRE LARGER SOCKS PER THE ENGINEER.
4. COMPOST MATERIAL TO BE DISPERSED ON SITE AS DETERMINED BY ENGINEER.

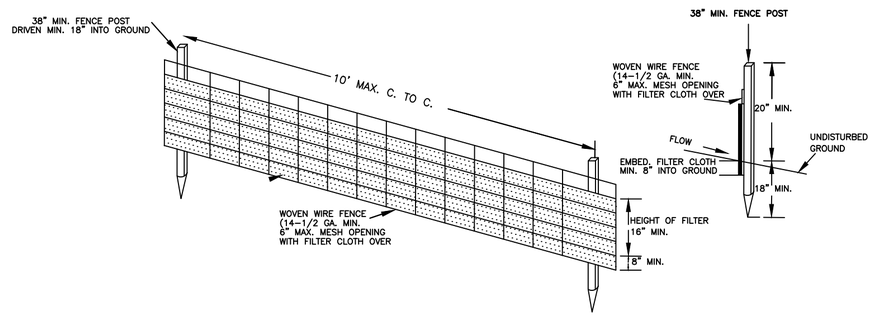

CONSTRUCTION NOTES FOR FABRICATED SILT FENCE

1. WOVEN WIRE FENCE TO BE FASTENED SECURELY TO FENCE POSTS WITH WIRE TIES OR STAPLES.
2. FILTER CLOTH TO BE FASTENED SECURELY TO WOVEN WIRE FENCE WITH TIES SPACED EVERY 24" AT TOP AND MID–SECTION.
3. WHEN TWO SECTIONS OF FILTER CLOTH ADJOIN EACH OTHER, THEY SHALL BE OVERLAPPED BY 6" AND FOLDED.
4. MAINTENANCE SHALL BE PERFORMED AS NEEDED AND MATERIAL REMOVED WHEN "BULGES" DEVELOP IN THE SILT FENCE.

POSTS: STEEL EITHER T OR U TYPE OR 2" HARDWOOD

FENCE: WOVEN WIRE, 14–1/2 GA. 6" MAX. MESH OPENING.

FILTER CLOTH: FILTER X, MIRAFI 100X, STABLINKA T140N OR APPROVED EQUAL.

PREFABICATED UNIT: GEOFAB, ENVIROFENCE, OR APPROVED EQUAL.

SILT FENCE / COMPOST SOCK DETAIL

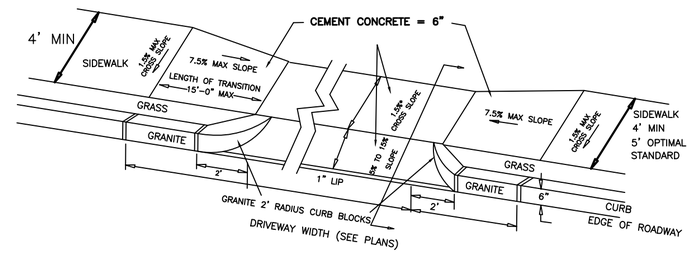

SIDEWALK THICKNESS FOR DRIVEWAYS

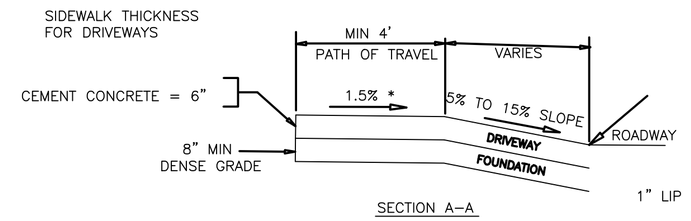

SECTION A–A

* TOLERANCE FOR CONSTRUCTION +/– 0.5%

DRIVEWAY APRON WITH CORNER BLOCKS

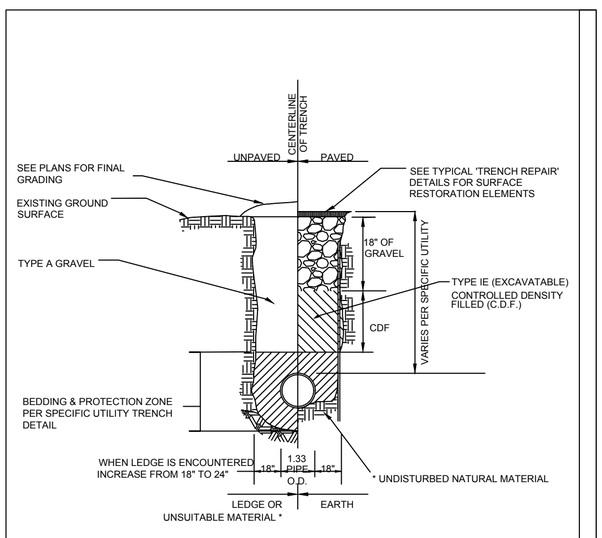

* SUITABILITY OF MATERIAL IS TO BE DETERMINED BY THE CITY OF NEWTON.

NOTE: TRENCHBOX OR SHEETING SHALL MEET OSHA STANDARDS.

TYPICAL C.D.F. (CONTROL DENSITY FILL) TRENCH SECTION

23

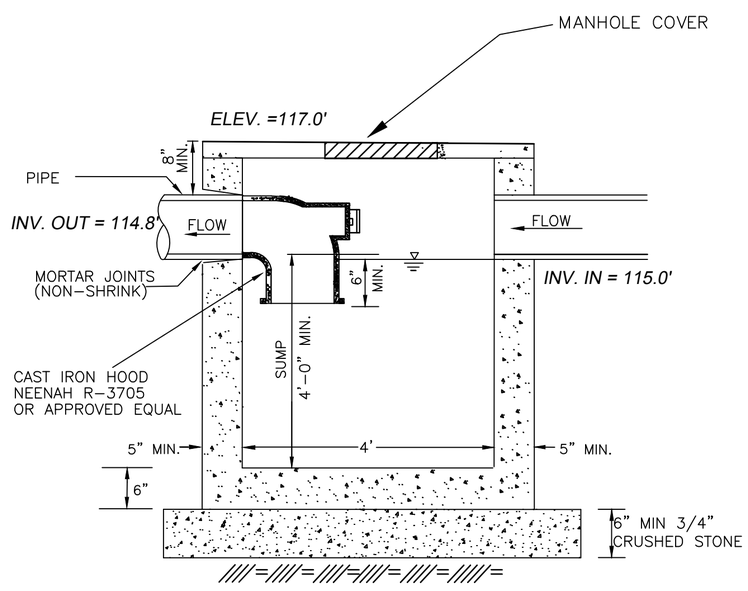

TYPICAL DRAIN MANHOLE DETAIL

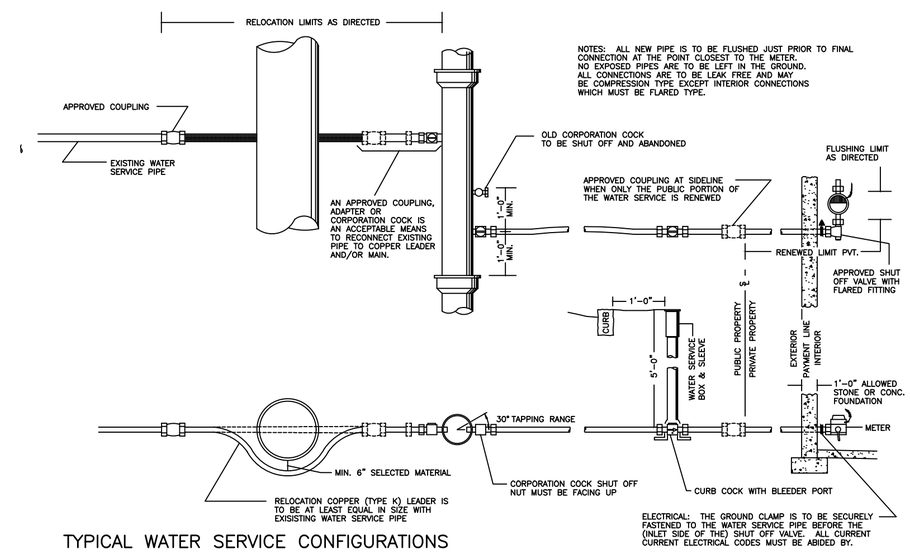

NOTES: ALL NEW PIPE IS TO BE FLUSHED JUST PRIOR TO FINAL CONNECTION AT THE POINT CLOSEST TO THE METER. NO EXPOSED PIPES ARE TO BE LEFT IN THE GROUND. ALL CONNECTIONS ARE TO BE LEAK FREE AND MAY BE COMPRESSION TYPE EXCEPT INTERIOR CONNECTIONS WHICH MUST BE FLARED TYPE.

TYPICAL WATER SERVICE CONFIGURATIONS

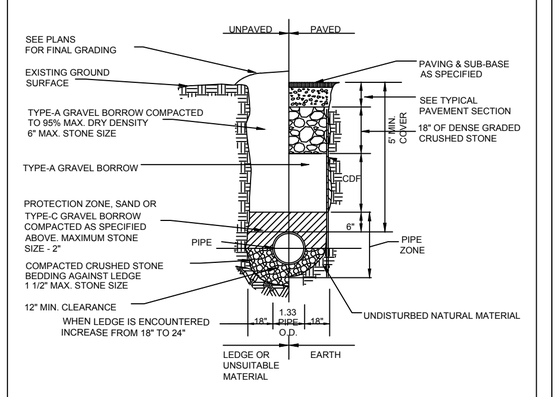

* SUITABILITY OF MATERIALS IS TO BE DETERMINED BY THE CITY OF NEWTON

1. GRAVEL BORROW SHALL CONFORM TO MASS HIGHWAY SPECIFICATION M1.03.0
2. CRUSHED STONE BEDDING SHALL CONFORM TO MASSDOT SPECIFICATION M2.01.1

NOTE: TRENCHBOX OR SHEETING SHALL MEET OSHA STANDARDS.

TYPICAL WATER TRENCH DETAIL

22

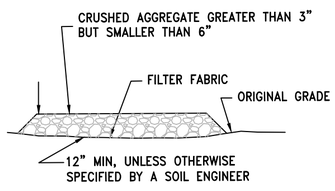

SECTION B–B
NTS

NOTES:
1. THE ENTRANCE SHALL BE MAINTAINED IN A CONDITION THAT WILL PREVENT TRACKING OR FLOWING OF SEDIMENT ONTO PUBLIC RIGHT–OF–WAYS. THIS MAY REQUIRE TOP DRESSING, REPAIR AND/OR CLEANOUT OF ANY MEASURES USED TO TRAP SEDIMENT.
2. WHEN NECESSARY, WHEELS SHALL BE CLEANED PRIOR TO ENTRANCE ONTO PUBLIC RIGHT–OF–WAY.
3. WHEN WASHING IS REQUIRED, IT SHALL BE DONE ON AN AREA STABILIZED WITH CRUSHED STONE THAT DRAINS INTO AN APPROVED SEDIMENT TRAP OR SEDIMENT BASIN.

RUMBLE STRIPS MAY BE USED AS AN ALTERNATIVE SUBJECT TO THE APPROVAL OF THE CITY PRIOR TO INSTALLATION

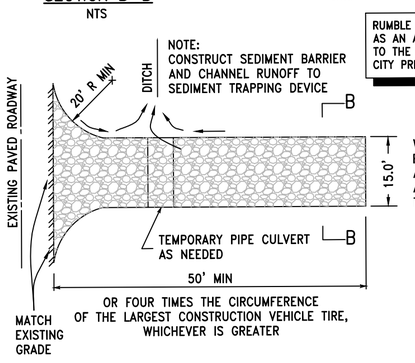

CONSTRUCTION SPECIFICATIONS:

1. THE AGGREGATE SIZE FOR CONSTRUCTION OF THE PAD SHALL BE 2–3 INCH (50–75 MM) STONE. PLACE THE GRAVEL TO THE SPECIFIC GRADE AND DIMENSIONS SHOWN ON THE PLANS, AND SMOOTH IT.
2. THE THICKNESS OF THE PAD SHALL NOT BE LESS THAN 6 INCHES (152 MM). USE GEOTEXTILE FABRICS, IF NECESSARY, TO IMPROVE STABILITY OF THE FOUNDATION IN LOCATIONS SUBJECT TO SEEPAGE OR HIGH WATER TABLE.
3. THE WIDTH OF THE PAD SHALL NOT BE LESS THAN THE FULL WIDTH OF ALL POINTS OF INGRESS OR EGRESS AND IN ANY CASE SHALL NOT BE LESS THAN 12 FEET (3.6 M) WIDE.
4. THE LENGTH OF THE PAD SHALL BE AS REQUIRED, BUT NOT LESS THAN 50 FEET (15.2 M).
5. LOCATE CONSTRUCTION ENTRANCES AND EXITS TO LIMIT SEDIMENT LEAVING THE SITE AND TO PROVIDE FOR MAXIMUM UTILITY BY ALL CONSTRUCTION VEHICLES. AVOID ENTRANCES WHICH HAVE STEEP GRADES AND ENTRANCES AT CURVES IN PUBLIC ROADS.
6. THE ENTRANCE SHALL BE MAINTAINED IN A CONDITION THAT WILL PREVENT TRACKING OR FLOWING OF SEDIMENT ONTO PUBLIC RIGHTS–OF–WAY. THIS MAY REQUIRE PERIODIC TOP DRESSING WITH ADDITIONAL STONE AS CONDITIONS DEMAND, AND REPAIR AND/OR MAINTENANCE OF ANY MEASURES USED TO TRAP SEDIMENT.
7. ALL SEDIMENT SPILLED, DROPPED, WASHED OR TRACKED ONTO PUBLIC RIGHTS–OF–WAY SHALL BE REMOVED IMMEDIATELY.
8. PROVIDE DRAINAGE TO CARRY WATER TO A SEDIMENT TRAP OR OTHER SUITABLE OUTLET.
9. WHEN NECESSARY, WHEELS SHALL BE CLEANED TO REMOVE SEDIMENT PRIOR TO ENTRANCE ONTO PUBLIC RIGHTS–OF–WAY. WHEN WASHING IS REQUIRED, IT SHALL BE DONE ON AN AREA STABILIZED WITH CRUSHED STONE THAT DRAINS INTO AN APPROVED SEDIMENT TRAP OR SEDIMENT BASIN. SEE SEDIMENT BASIN BMP.
10. ALL SEDIMENT SHALL BE PREVENTED FROM ENTERING ANY STORM DRAIN, DITCH OR WATERCOURSE THROUGH USE OF SAND BAGS, GRAVEL, STRAW BALES, OR OTHER APPROVED METHODS.

INSPECTION AND MAINTENANCE:

11. MAINTAIN THE GRAVEL PAD IN A CONDITION TO PREVENT MUD OR SEDIMENT FROM LEAVING THE CONSTRUCTION SITE.
12. REPLACE GRAVEL MATERIAL WHEN SURFACE VOIDS ARE NOT VISIBLE.
13. AFTER EACH RAINFALL, INSPECT ANY STRUCTURE USED TO TRAP SEDIMENT AND CLEAN IT OUT AS NECESSARY.
14. IMMEDIATELY REMOVE ALL OBJECTIONABLE MATERIALS SPILLED, WASHED, OR TRACKED ONTO PUBLIC ROADWAYS. REMOVE ALL SEDIMENT DEPOSITED ON PAVED ROADWAYS WITHIN 24 HOURS.

NOTE: DIMENSIONS ± SUBJECT TO SITE PARAMETERS & CONDITIONS

STABILIZED CONSTRUCTION ENTRANCE DETAIL

N.T.S.

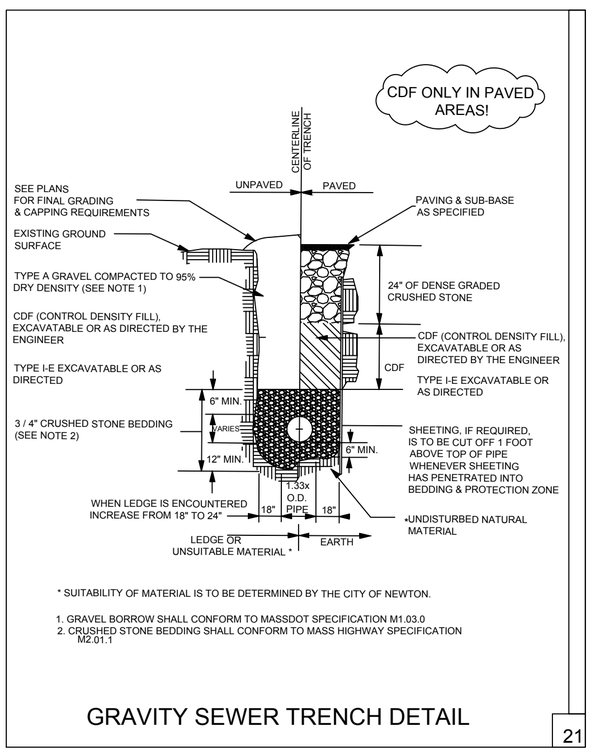

* SUITABILITY OF MATERIAL IS TO BE DETERMINED BY THE CITY OF NEWTON.

1. GRAVEL BORROW SHALL CONFORM TO MASSDOT SPECIFICATION M1.03.0
2. CRUSHED STONE BEDDING SHALL CONFORM TO MASS HIGHWAY SPECIFICATION M2.01.1

GRAVITY SEWER TRENCH DETAIL

21

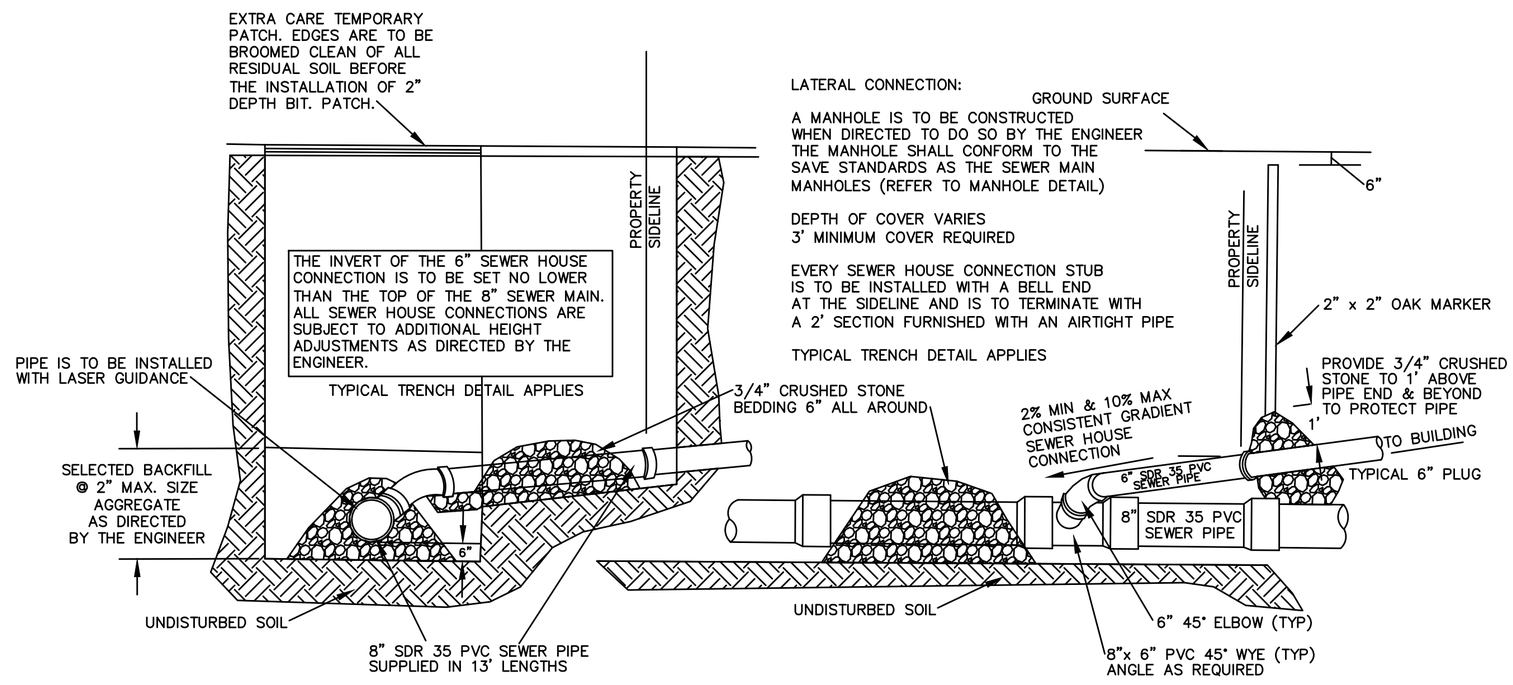

END VIEW

ELEVATION VIEW

TYPICAL PVC SEWER HOUSE CONNECTION

N.T.S.

Spruhan Engineering, P.C.
80 JEWETT ST, (SUITE 2)
NEWTON, MA 02458
Tel: 617-816-0722
Email:edmond@spruhaneng.com

190 UPLAND AVENUE
NEWTON
MASSACHUSETTS

DETAILS

REVISION BLOCK

DESCRIPTION	DATE

All legal rights including, but not limited to, copyright and design patent rights, in the designs, arrangements and plans shown on this document are the property of Spruhan Engineering, P.C. They may not be used or reused in whole or in part, except in connection with this project, without the prior written consent of Spruhan Engineering, P.C.. Written dimensions on these drawings shall have precedence over scaled dimensions. Contractors shall verify and be responsible for all dimensions and conditions on this project, and Spruhan Engineering, P.C., must be notified of any variation from the dimensions and conditions shown by these drawings.

COMMONWEALTH OF MASSACHUSETTS
EDMOND J. SPRUHAN
CIVIL
No. 53316
REGISTERED PROFESSIONAL ENGINEER

DATE:	7/14/2022
DRAWN BY:	O.G.
CHECKED BY:	C.C.
APPROVED BY:	E.S.

CIVIL PLAN

SHEET 4 OF 5

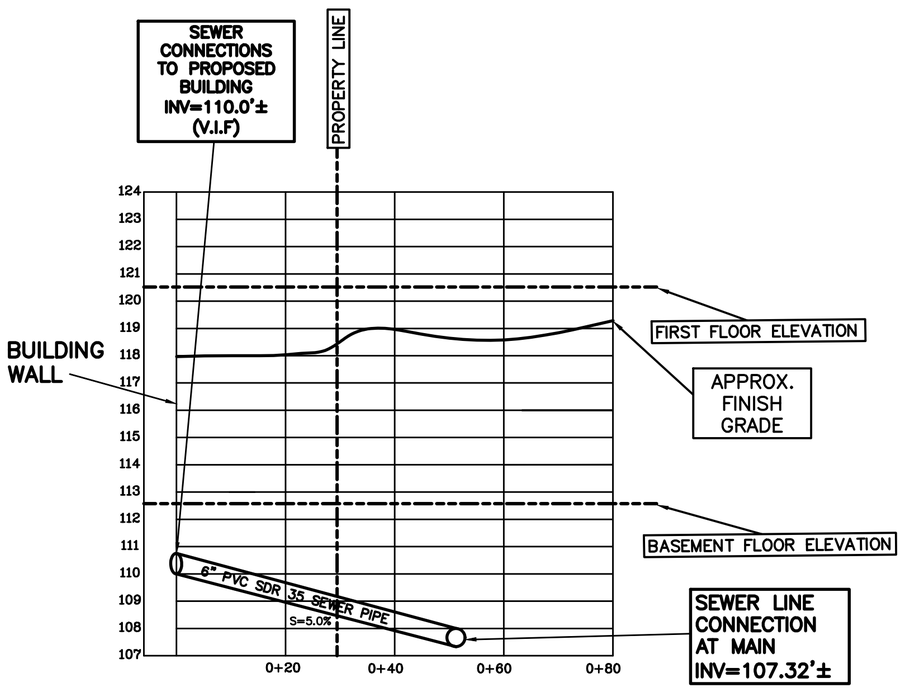

PROPOSED SEWER PROFILE
V SCALE = 1"=4'
H SCALE = 1"=20'

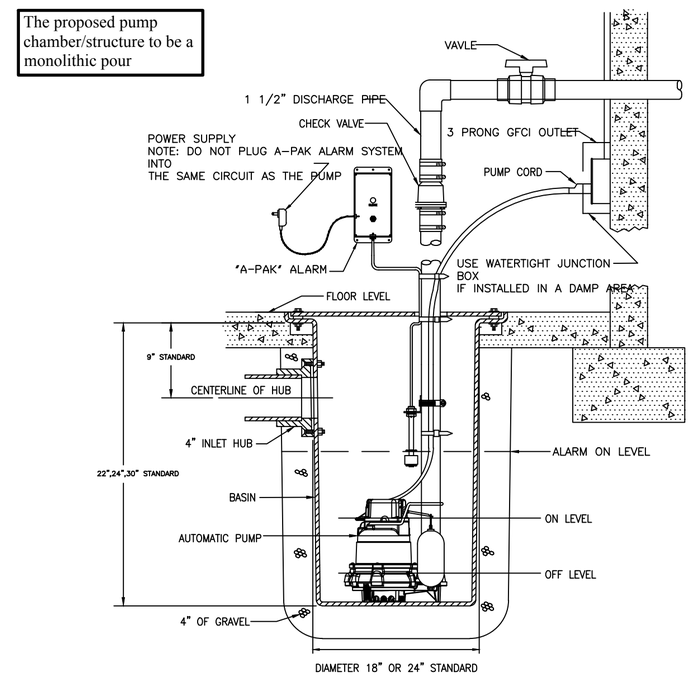

TYPICAL SUMP PUMP DETAIL
NOT TO SCALE

NOTE:
1. COMPRESSED FILLER ALL JOINTS JOINTS TO BE WATER TIGHT WITH 1-2 CEMENT MORTAR OR TYLOX TYPE C RUBBER GASKET OR NEOPRENE SEAL.
2. CONTRACTOR TO VERIFY SIZE OF PUMP PRIOR TO ANY DRAINAGE BEING CARRIED OUT.
3. PUMPS TO BE CONNECTED TO EMERGENCY BACKUP GENERATOR.

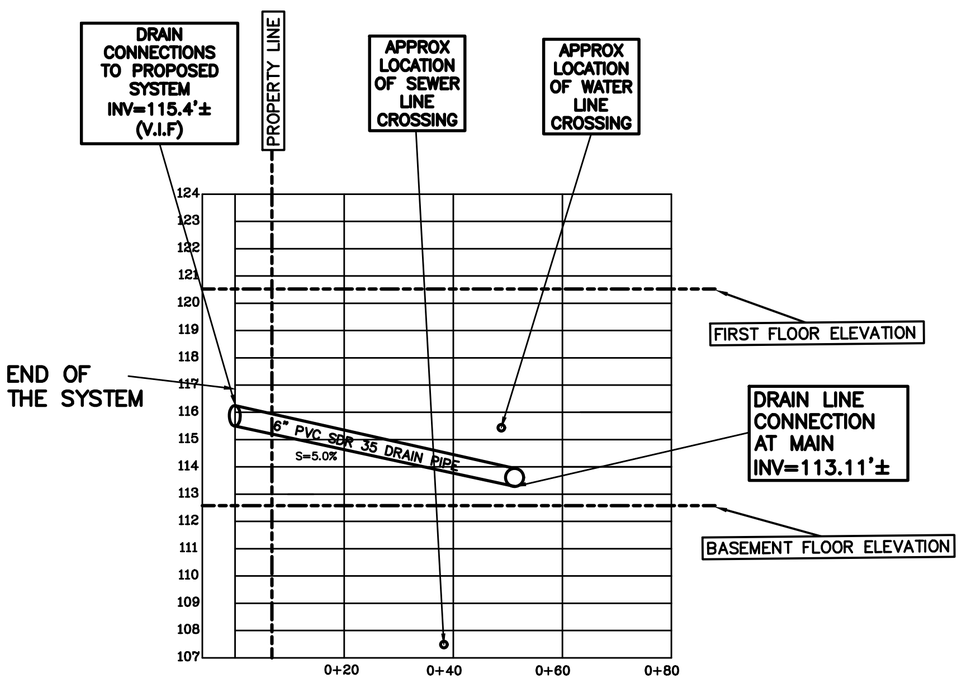

PROPOSED DRAIN PROFILE
V SCALE = 1"=4'
H SCALE = 1"=20'

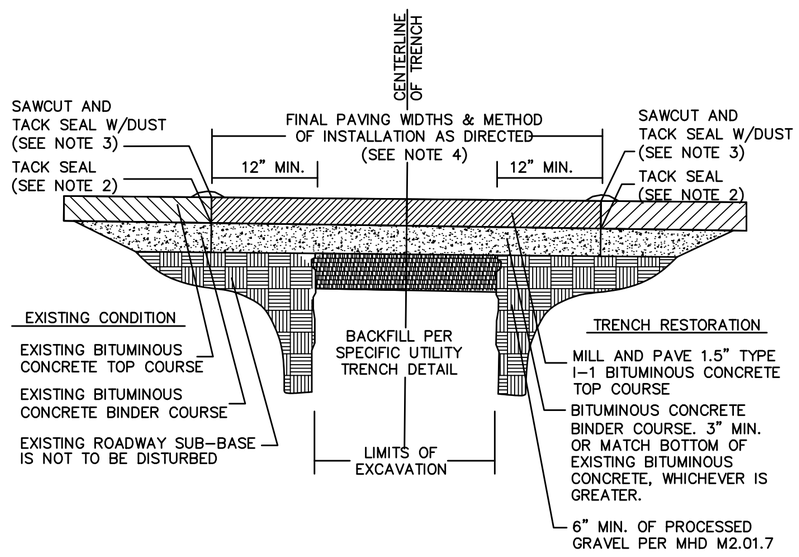

TYPICAL TRENCH REPAIR & PAVEMENT SECTION DETAIL

1. ALL INSTALLATION AND MATERIAL SPECIFICATIONS PER MASSDOT DEPARTMENT OF TRANSPORTATION STANDARD SPECIFICATIONS FOR HIGHWAYS AND BRIDGES, 2020 AS AMENDED.
2. ALL EXPOSED BITUMINOUS CONCRETE IS TO BE TACKED PER MASSDOT PRIOR TO NEW BITUMINOUS CONCRETE INSTALLATIONS.
3. ALL EXPOSED JOINTS ARE TO BE SEALED WITH TACK AND STONE DUST.
4. ANY TOP COURSE APPLIED AT A WIDTH OF 6' WIDE OR GREATER IS TO BE PLACED BY MACHINE/BOX SPREADER WHEN & AS DIRECTED BY THE CITY OF NEWTON.
5. SUPER PAVE FOR PAVEMENT

Spruhan Engineering, P.C.
80 JEWETT ST, (SUITE 2)
NEWTON, MA 02458
Tel: 617-816-0722
Email:edmond@spruhaneng.com

190 UPLAND AVENUE
NEWTON
MASSACHUSETTS

DETAILS

REVISION BLOCK

DESCRIPTION	DATE

All legal rights including, but not limited to, copyright and design patent rights, in the designs, arrangements and plans shown on this document are the property of Spruhan Engineering, P.C. They may not be used or reused in whole or in part, except in connection with this project, without the prior written consent of Spruhan Engineering, P.C.. Written dimensions on these drawings shall have precedence over scaled dimensions. Contractors shall verify and be responsible for all dimensions and conditions on this project, and Spruhan Engineering, P.C., must be notified of any variation from the dimensions and conditions shown by these drawings.

COMMONWEALTH OF MASSACHUSETTS
EDMOND J. SPRUHAN
CIVIL
No. 53316
REGISTERED PROFESSIONAL ENGINEER

DATE:	7/14/2022
DRAWN BY:	O.G.
CHECKED BY:	C.C.
APPROVED BY:	E.S.

CIVIL PLAN

SHEET 5 OF 5